DUSK.COM

LIVING | BEDROOM | DINING

Range Name:Ravello
Box dimension:Double:box1:W104xD102xH15(cm)
box2:W198xD21xH12(cm)
King:box1:W148.5xD102xH15(cm)
box2:W198xD21xH12(cm)

Product dimension:Double:W201.6xD142xH95(cm)
King:W211.6xD157xH95(cm)

Ravello Rattan Bed Frame

Double/King

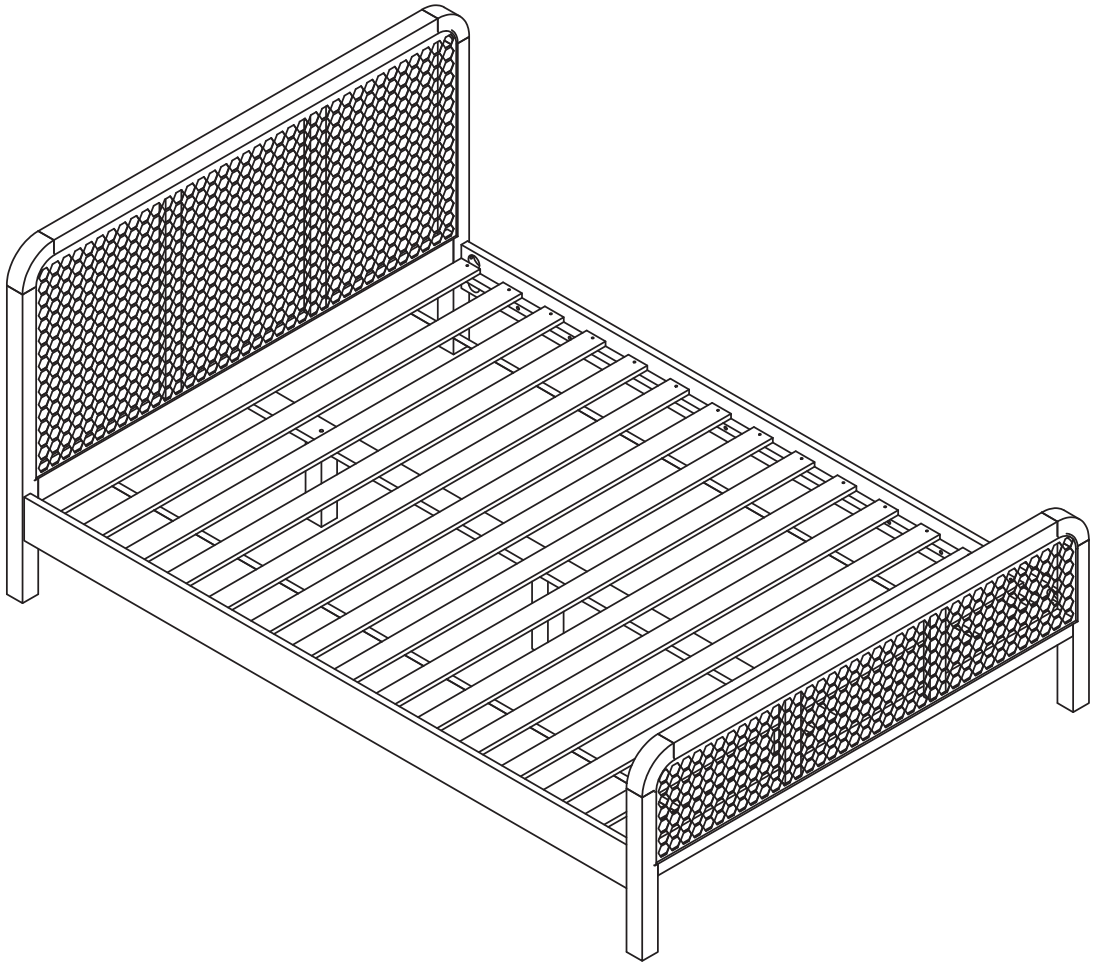

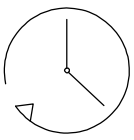

Up to 60 minutes assembly time

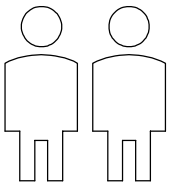

Two person assembly

This product is intended for domestic use only, not commercial purposes.

Important

Assembly Tip

Before you begin, it’s best to identify all of the parts and fitting to build your bed frame. We advise laying these out on the floor to check you have everything, and to familiarise yourself with all of the parts and fitting before building.

Top Tip

We recommend that you build your new bed frame in the room you’d like it ti be located. This will help prevent any risk of damage to the frame whilst moving it.

Safety and Care

It’s important to ensure children and animals are kept away from the assembly area, as there are small components used inthe bed frame which could present a choking hazard. All plastic and wrapping materials should also be kept away from children and animals to prevent any risk of suffocation.

Help and Support

Please contact our customer service team on 0113 519 0311 if you have any questions or issues with your purchase.

Recycling

Please ensure that packaging is dis posed of in a safe and environmentally friendly way, and recycle where possible. Please keep your assembly instructions safe to refer back to in the future.

Parts

Before you begin building your bed frame, please take a moment to read through the instructions and make sure that you have all the relevant parts listed on parts check list.

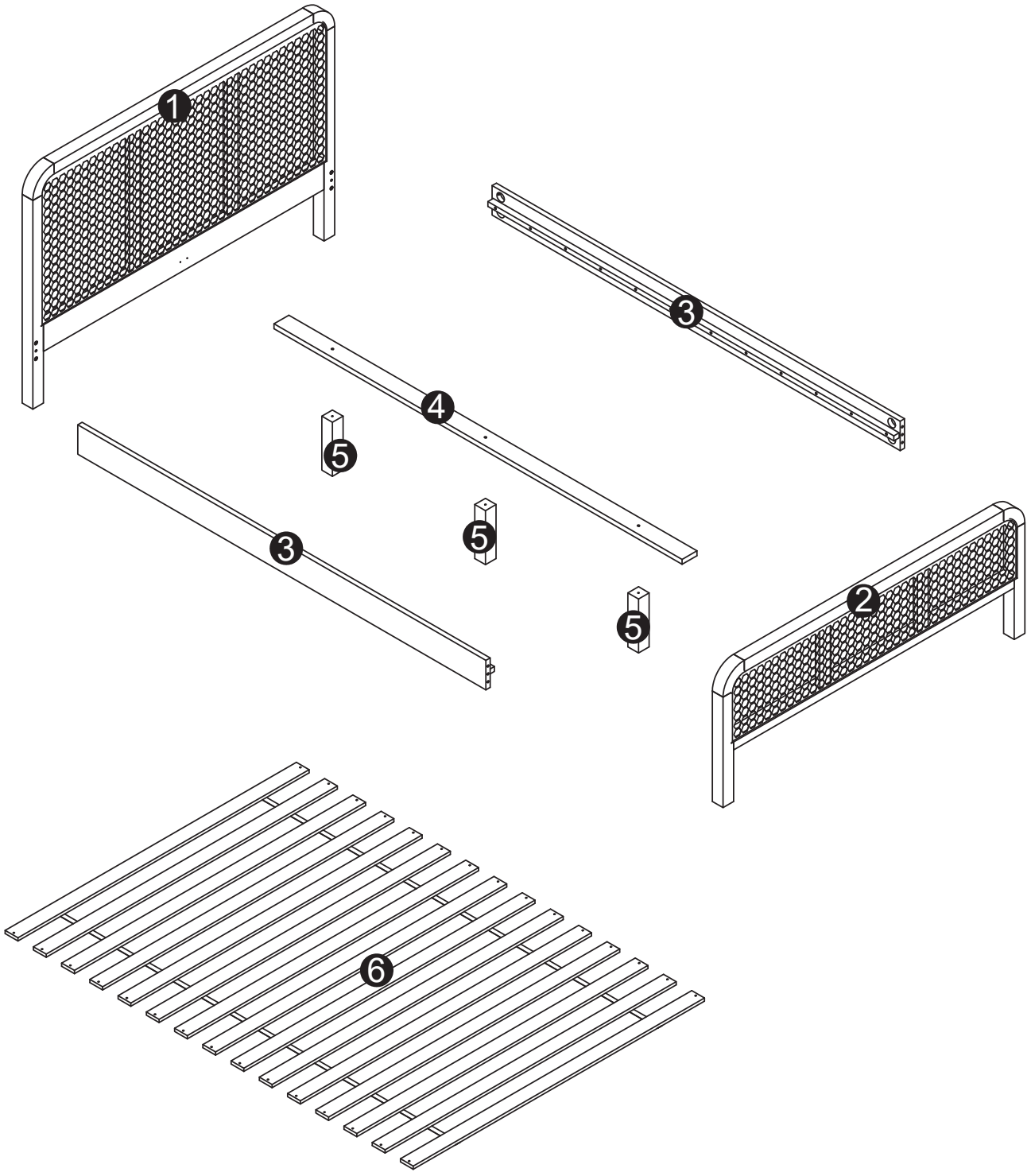

Parts Check List

No.	Part List	Qty	Box No
1	Headboard	1pc	Box 1
2	Footboard	1pc	Box 1
3	Side Rail	2pc	Box 2
4	Centre Bar	1pc	Box 2
5	Centre Support Legs	3pc	Box 1
6	Slat	15pc	Box 1

Fittings (In Box 1)

Please check you have all the fitting listed below with you product.

A x8  Threaded Studs M6x70mm	B x8  Curved Washers	C x8  Flat Washers	D x8  Hex Nuts
E x4 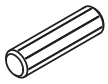 Dowel Ø8x30mm	F x3 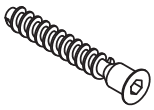 Screw Ø7x60mm	G x2 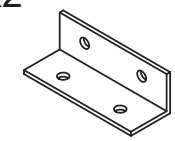 L Bracket Corner Brace	H x8  Screw Ø3x16mm
J x30  Screw Ø4x30mm	K x1 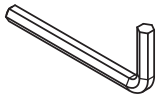 Allen Key M4	L x1 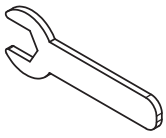 Hex Wrench	M x8  Cover Sticker

Step 1 Attach Wood Dowels,and Threaded Studs.

E	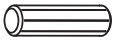	4 pcs
A		8 pcs

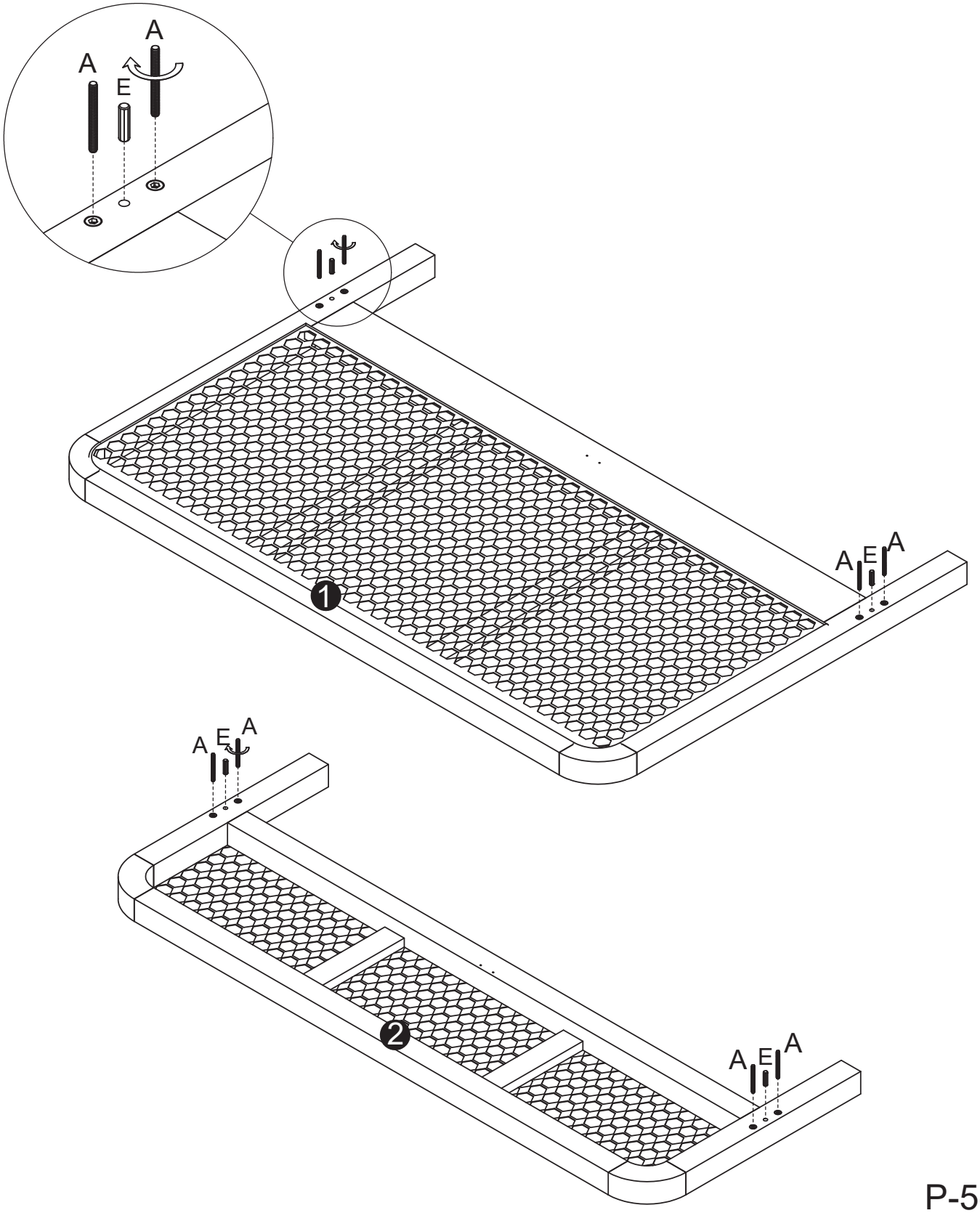

Step 2 Attach the Side Rails to the Headboard and Footboard.

C		8 pcs
L		1 pcs
B		8 pcs
D		8 pcs

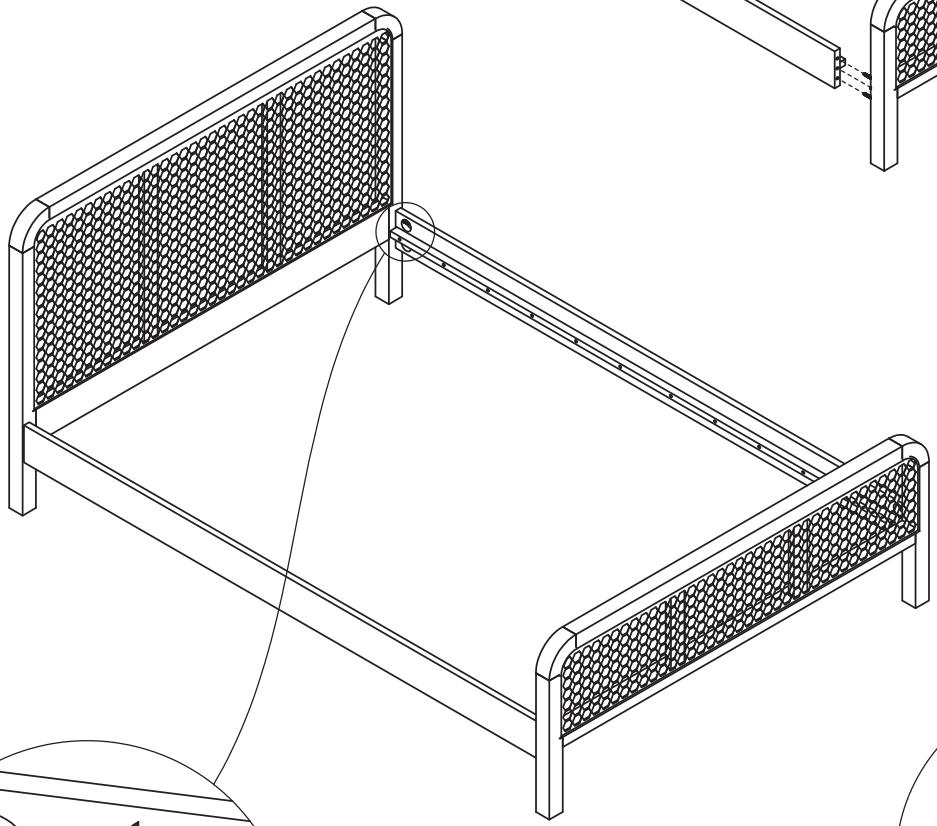

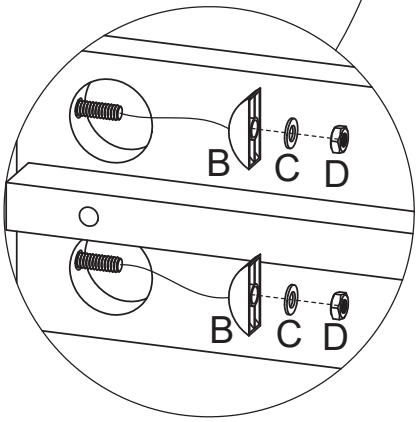

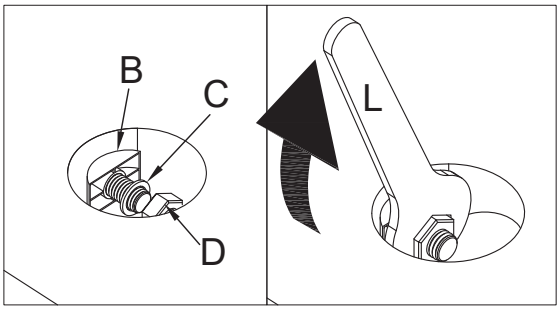

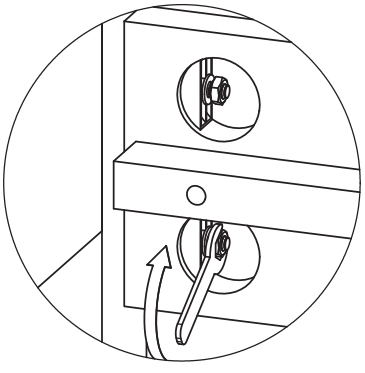

Step 3

Attach the Central Support Legs and Corner Brackets to the Central Support Rail.

K	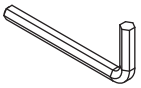	1 pc
F		3 pcs
G	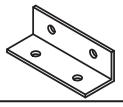	2 pcs
H		4 pcs

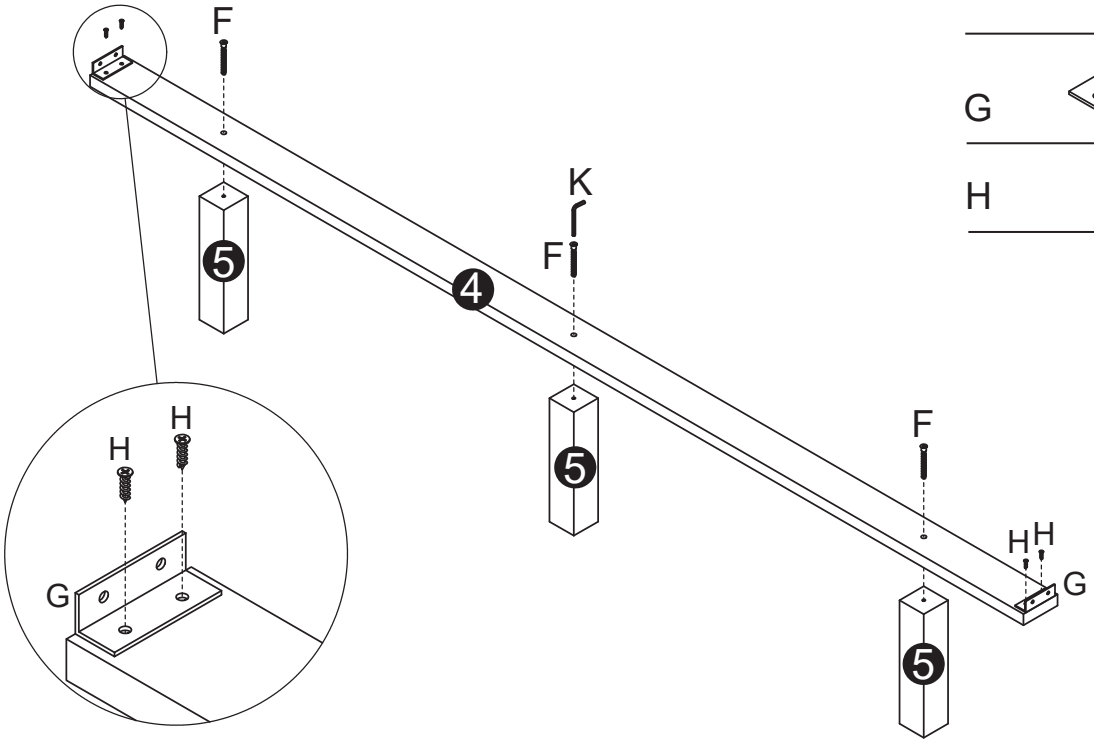

Step 4

Attach the Central Support Rail to the Headboard and Footboard.

H		4 pcs

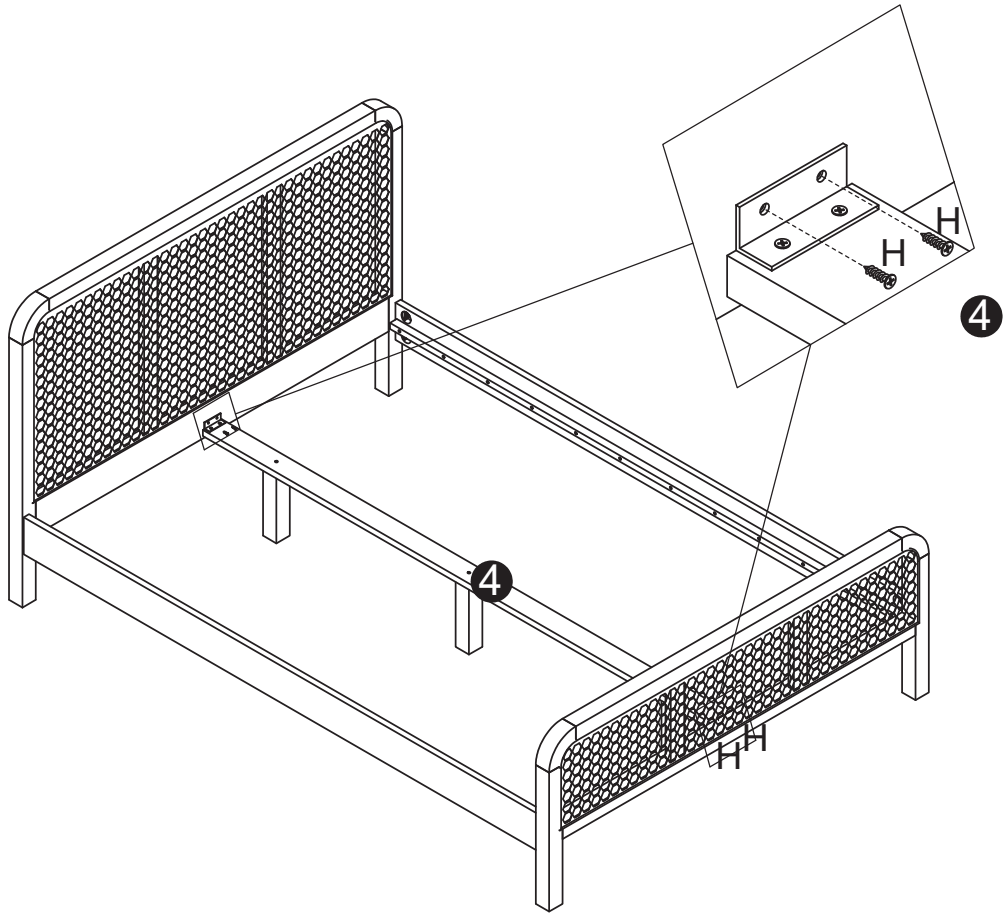

Step 5 Cover the sticker on the hole.

M 8 pc

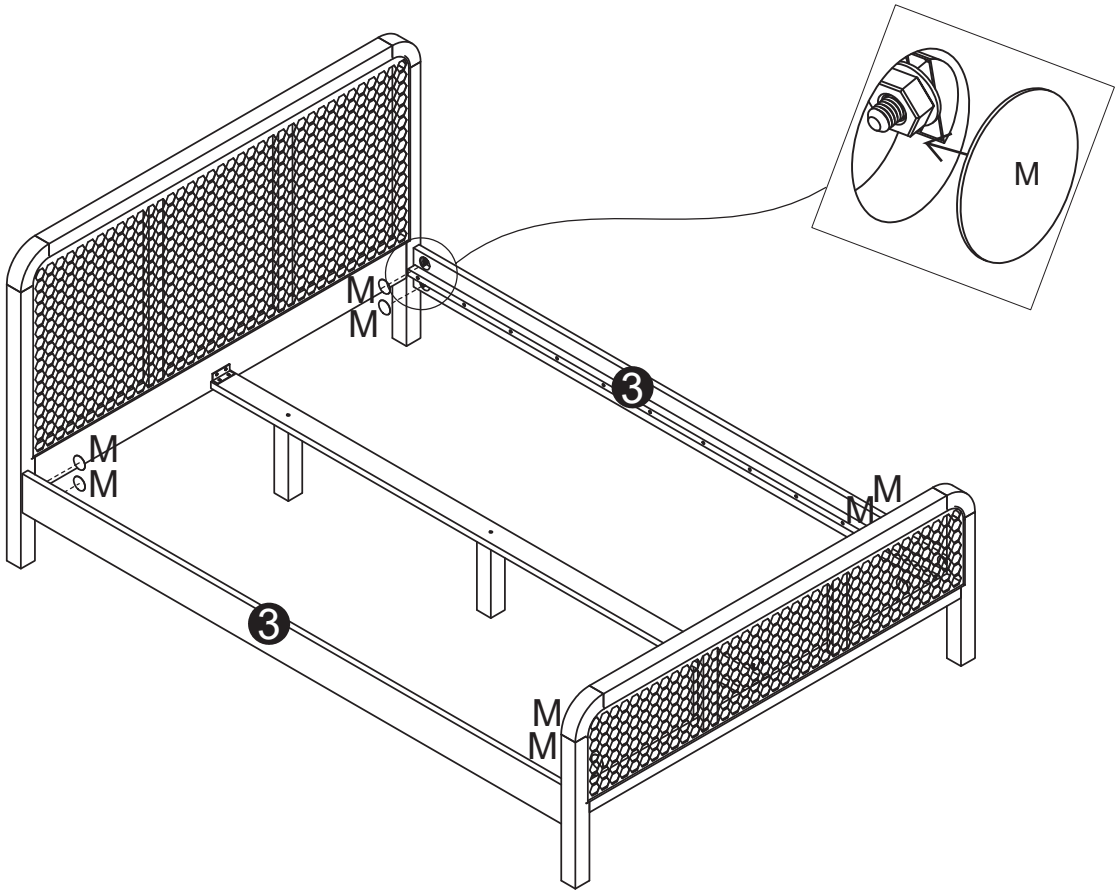

Step 6 Attach the Slats to the Bed Frame.

J 30 pcs

Note:Gently push both side rails towards the centre of the bed frame before tightening the screws

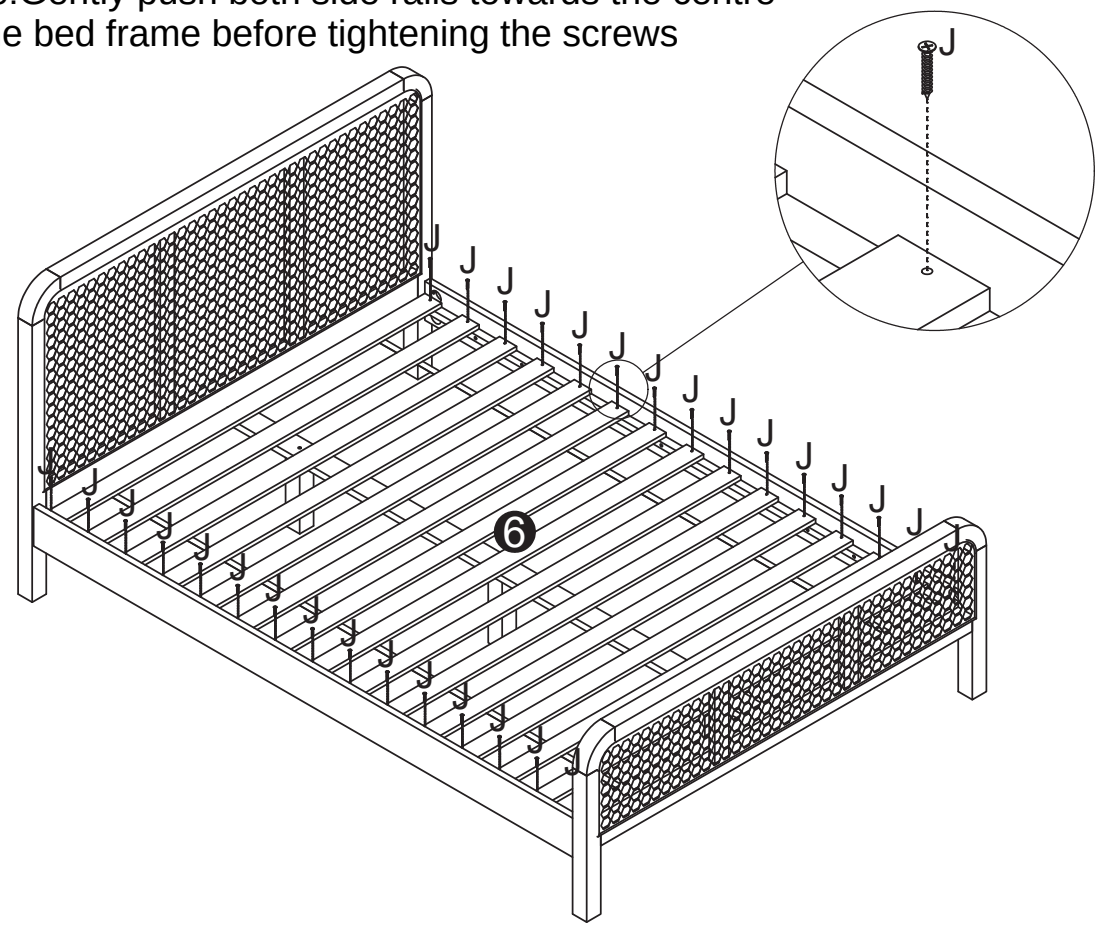

Care and Maintenance

Here are some good tips to keep your new bed frame in tip-top condition.

Cleaning

To clean youe new bed frame, we asivise using a damp cloth if the fabric is dusty or a low suction vacuum. Do not use abrasive chemicals or bleach as this may damage the product.

Checking and Moving

Periodically, we recommend you check that the screws and fixtures haven’t become loose over time. To move your bed frame, we recommend lifting it where possible, as deagging or pushing it could cause damage to the legs or flooring.