DUSK.COM
LIVING | BEDROOM | DINING

Range Name:Brooklyn
Box dimensions: W100 x D100 x H68 (cm)
Product dimension:W98 x D98 x H82.5(cm)

Modular Corner Piece

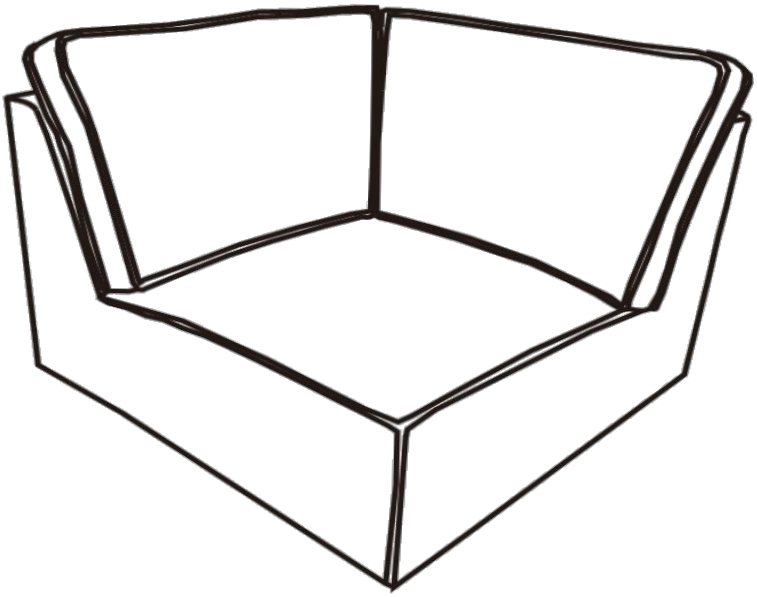

Up to 10 minutes assembly time

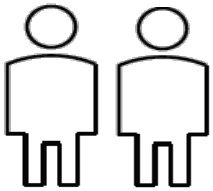

Two person assembly

This product is intended for domestic use only, not for commercial purpose.

Important

Assembly Tip

Before you begin, it's best to identify all of the parts and fittings to build your sofa frame. We advise laying these out on the floor to check you have everything, and to familiarise yourself with all of the parts and fittings before building.

Top Tip

We recommend that you assemble the sofa in the room you'd like it to be located. This will help prevent any risk of damage to the frame whilst moving it.

Safety and Care

It's important to ensure children and animals are kept away from the assembly area, as there are small components used in this product which could present a choking hazard. All plastic and wrapping materials should also be kept away from children and animals to prevent any risk of suffocation.

Help and Support

Please contact our customer service team on 0113 519 0311 if you have any questions or issues with your purchase.

Recycling

Please ensure that packaging is disposed of in a safe and environmentally friendly way, and recycle where possible. Please keep your assembly instructions safe to refer back to in the future.

Care and Maintenance

1. Clean with your vacuum curtain attachment (the one with a lint-catching fabric strip) or a lint roller to stop dust build up. Do this regularly to keep the sofa in its best condition.
2. Regularly plump the backrest pillows by shaking and squeezing to even out the filling.
3. Try to keep your sofa away from direct sunlight, and not too close to heat sources, as this can cause fading over time. Do not allow the sofa to make direct contact with any radiators or sources of heat.
4. Wipe up the spillages as quickly as possible by gently dabbing or blotting with a dry cloth until the mark fades away. Some tougher spills, such as oil and grease, can be more persistent and leave a stain. In this case, it's best to contact a specialist cleaning service.
5. Do not drag the sofa. When moving, lift the sofa off the floor.
6. Keep children and pets away from the assembly area and any packaging, small parts could choke if swallowed.
7. Do not sit on the arms of the sofa.
8. Do not jump on the sofa.
9. Only use the sofa on a flat and level surface.
10. Dispose of all packaging carefully and responsibly – recycle where possible.
11. This product is intended for domestic use only, not for commercial purposes.
12. Avoid sharp items such as toys, jean rivets, buckles etc from coming in contact with the fabric as these can easily snag, tear or pull the fabric.

Parts List

Before you start to build your sofa, please take a moment to read through the instructions and make sure that you have all the relevant parts listed on the parts check list.

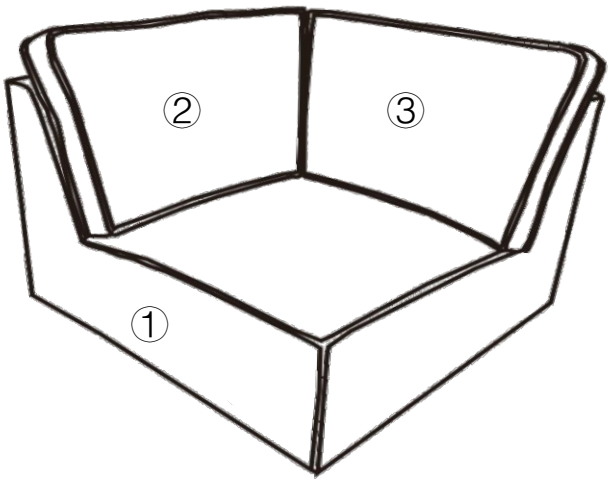

NO.	Part List	QTY
1	Frame	1pc
2	Left Back Pillow	1pc
3	Right Back Pillow	1pc

Fittings List

Please check you have all the fittings listed below with your product:

A 3CM Plastic Leg x 4PCS

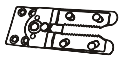

B Clip x 2pcs

C Clip x 2pcs

Step 1:Remove all the parts from the zipper on the underside of the sofa.

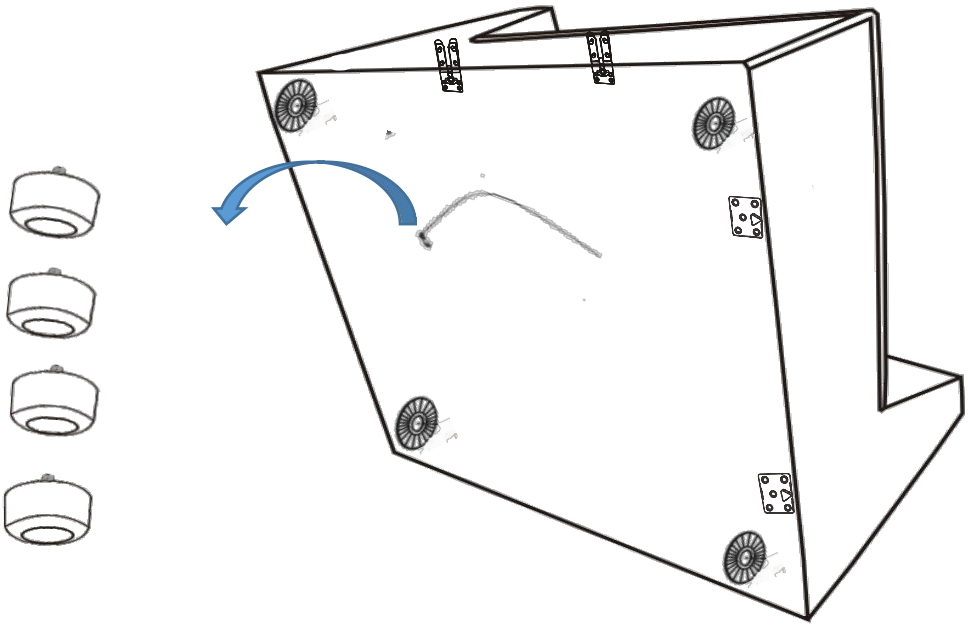

Step 2: Align a leg(A) to a hole on the bottom of the sofa and twist the leg until tight and secure .Repeat this for all four legs.

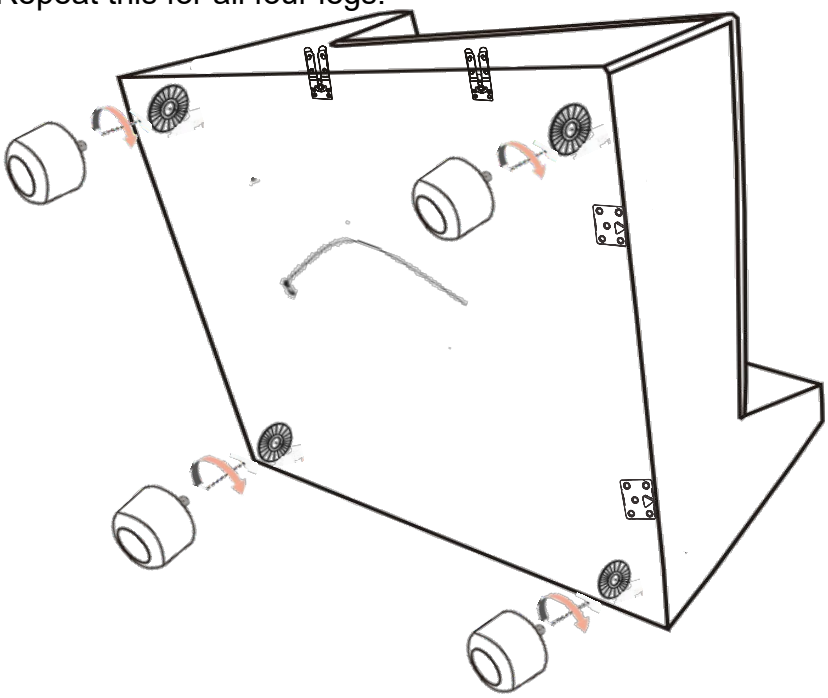
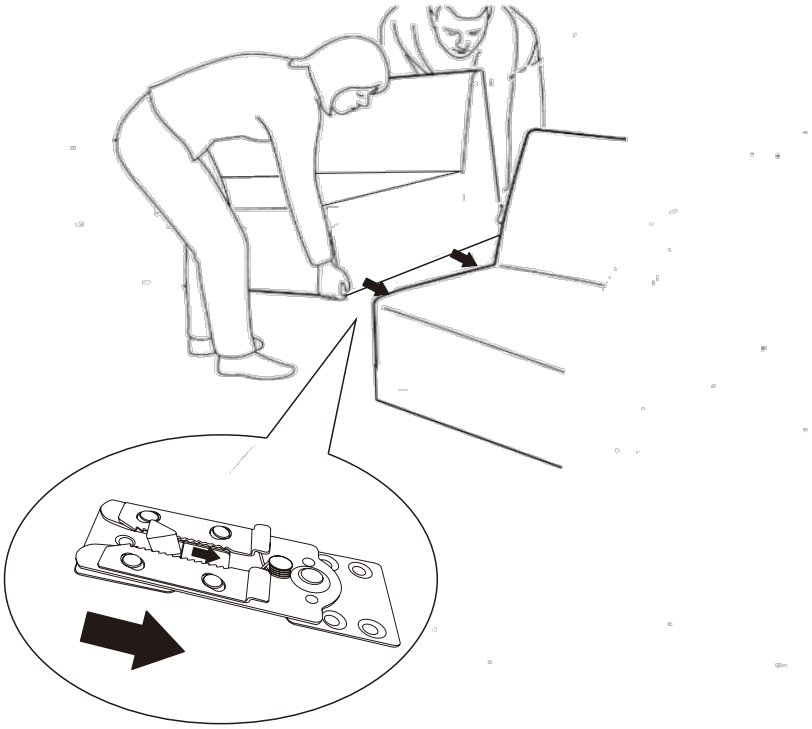
Step 3:When connecting the sofa pieces together, ensure that you place the sofa in the desired location.Then align the fixed clip on the bottom of the sofa as shown below. Then attach the remaining sofa pieces together.