DUSK.COM

LIVING I BEDROOM I DINING

Range Name:Melrose
Box dimensions:Double bed:box 1:W153.5XD134.5XH13.5(CM)
box 2:W199XD36XH24.5(CM)
Product size:Double bed:W147XD209XH130(CM)

Melrose Ottoman bed Frame

Double size

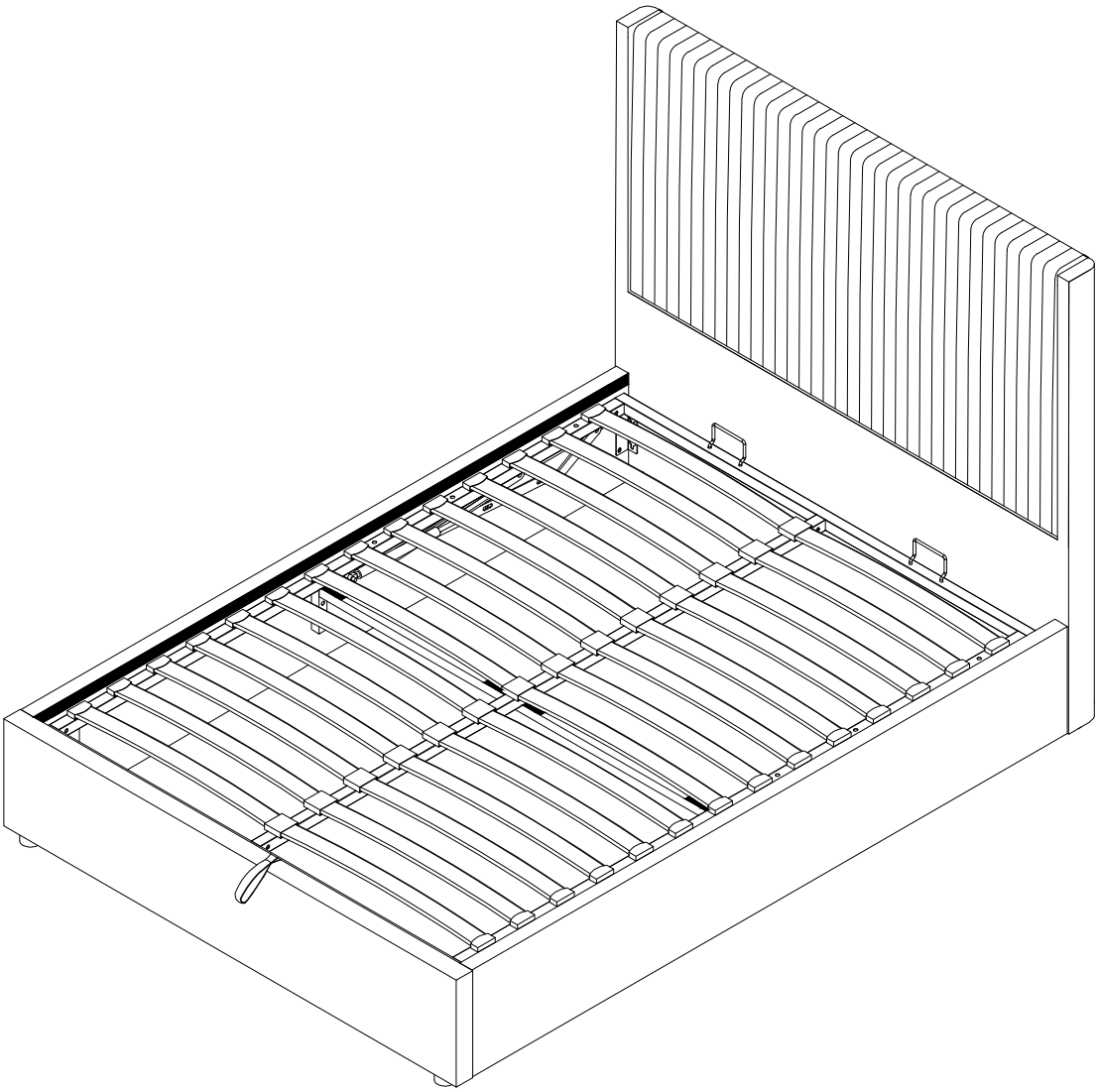

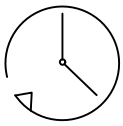

Up to 2 hour approx
assembly time

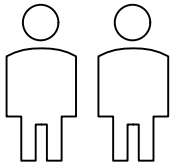

Two person
assembly

Important

Assembly Tip

Before you begin, it's best to identify all of the parts and fittings to build your ottoman bed frame. We advise laying these out on the floor to check you have everything, and to familiarise yourself with all of the parts and fittings before building.

Top Tip

We recommend that you build your new ottoman bed frame in the room you'd like it to be located. This will help prevent any risk of damage to the frame whilst moving it.

Safety and Care

It's important to ensure children and animals are kept away from the assembly area. as there are small components used in this bed frame which could present a choking hazard. All plastic and wrapping materials should also be kept away from children and animals to prevent any risk of suffocation.

Help and Support

Please contact our customer service team on 0113 519 0311 if you have any questions or issues with your purchase.

Recycling

Please ensure that packaging is disposed of in a safe and environmentally friendly way, and recycle where possible. Please keep your assembly instructions safe to refer back to in the future.

Operating Your Ottoman Bed Frame Safely

- Caution, this ottoman bed frame uses a pressurised mechanism.
- Please ensure children and animals are kept away from the ottoman bed frame when operating the mechanism.
- Use caution when operating, and always use two hands at arm's length.
- You must always ensure the mattress is on the ottoman bed frame before lifting the mechanism. Failure to do so may result in injury or damage to the mechanism.
- If removing the mattress, make sure the ottoman bed frame is secured as it could flip open.
- Only use the storage compartment when the ottoman bed frame is fully in the upright position.
- Do not remain on the ottoman bed frame whilst the lifting mechanism is in use.
- Beware of entrapment. Keep both hands clear of the mechanism when operating.
- When lifting the ottoman bed frame, remove all bedding except the fitted sheet.
- Always use the strap to lift or lower the ottoman metal frame. Close the ottoman metal frame by pushing down firmly with both hands towards the centre of the bed frame with pressure.
- No children or animals should be left unattended when the ottoman bed frame is in the upright position.
- When fully assembled, raise and lower the ottoman metal frame 4/5 times to ensure the gas pistons are fully lubricated.
- Ensure to re-tighten all nuts and bolts within the ottoman bed frame after the first two weeks of use.

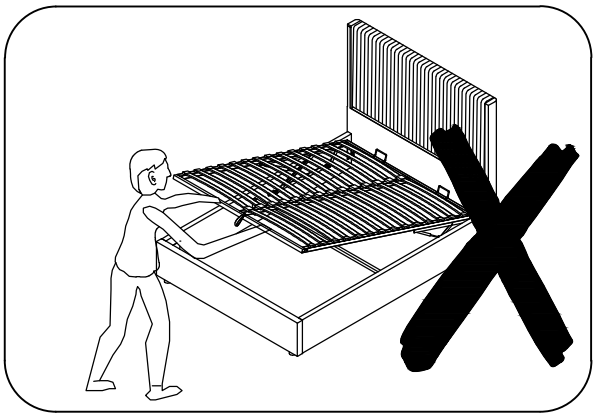

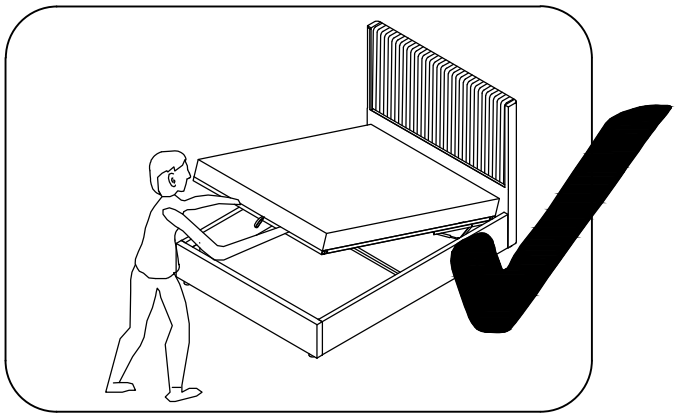

Hints and Tip

If removing the mattress, make sure the frame is secured so it does not flip open.
When lifting the bed frame,remove pillows and covers.

PLEASE NOTE- It takes a lot of force to make the initial movement of the ottoman-THIS IS A DESIGN FEATURE OF THE PRODUCT SO THAT IT DOES NOT FALL SHUT-and the nearer to being closed the ottoman is, the easier it is to move. When the ottoman is almost shut, keep fingers and hands clear and it will close completely under its own weight.

When lowering the slat unit for the first time, take care to make sure it does not rub unevenly on the inside face of the Side Rail. If it does, the bed has been assembled slightly out of square. This can be rectified by moving the Footboard of the bed slightly to the left or right whilst leaving the headboard of the bed frame stationary.

CAUTION: Do not attempt to move the bed frame while the ottoman is NOT lifted or lifted with the mattress on.It may cause the injury due to the bed frame flips up or falls shut unexpectedly.

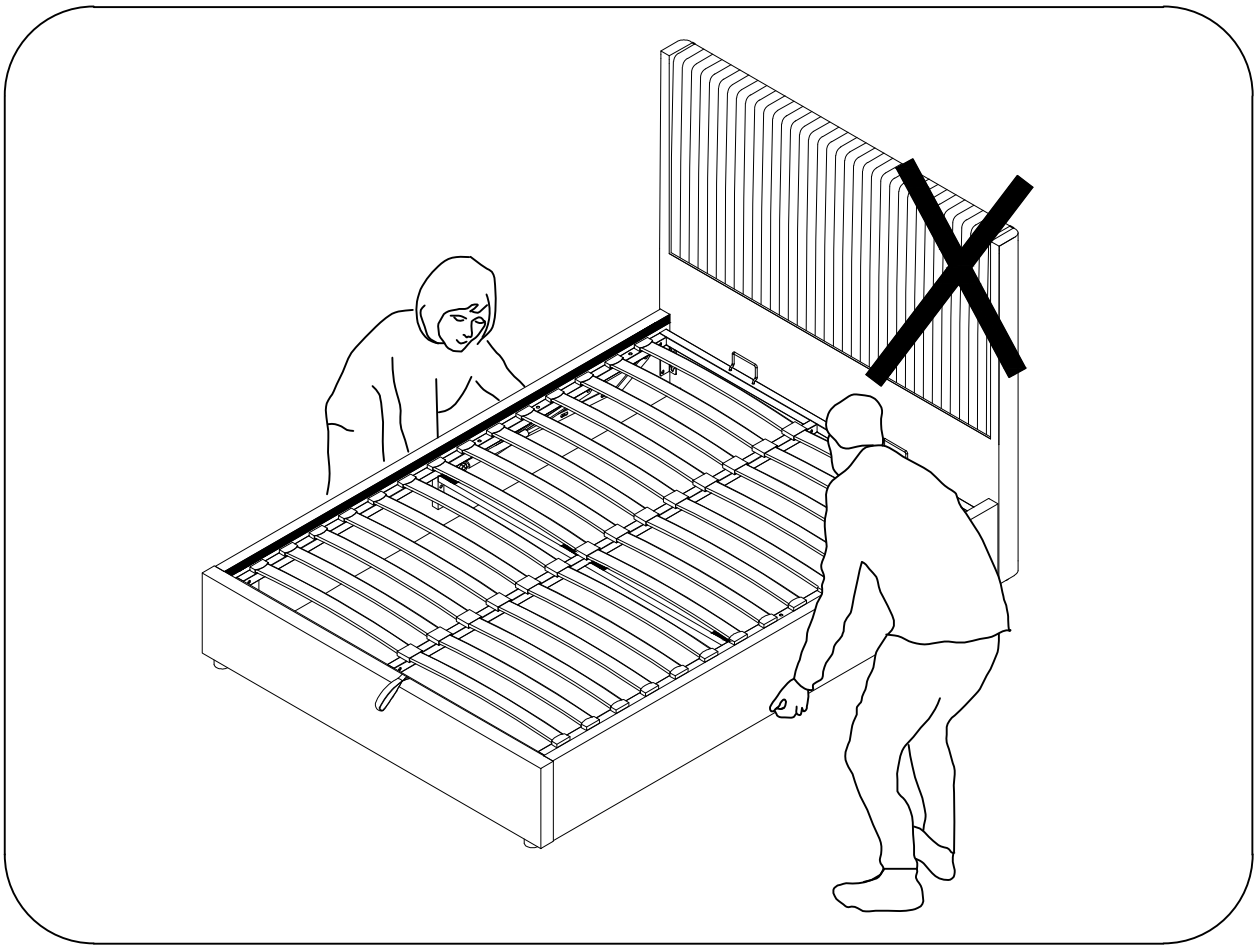

Parts

Before you begin building your ottoman bed frame，please take a moment to read through the instructions and make sure that you have all the relevant parts listed on the parts check list.

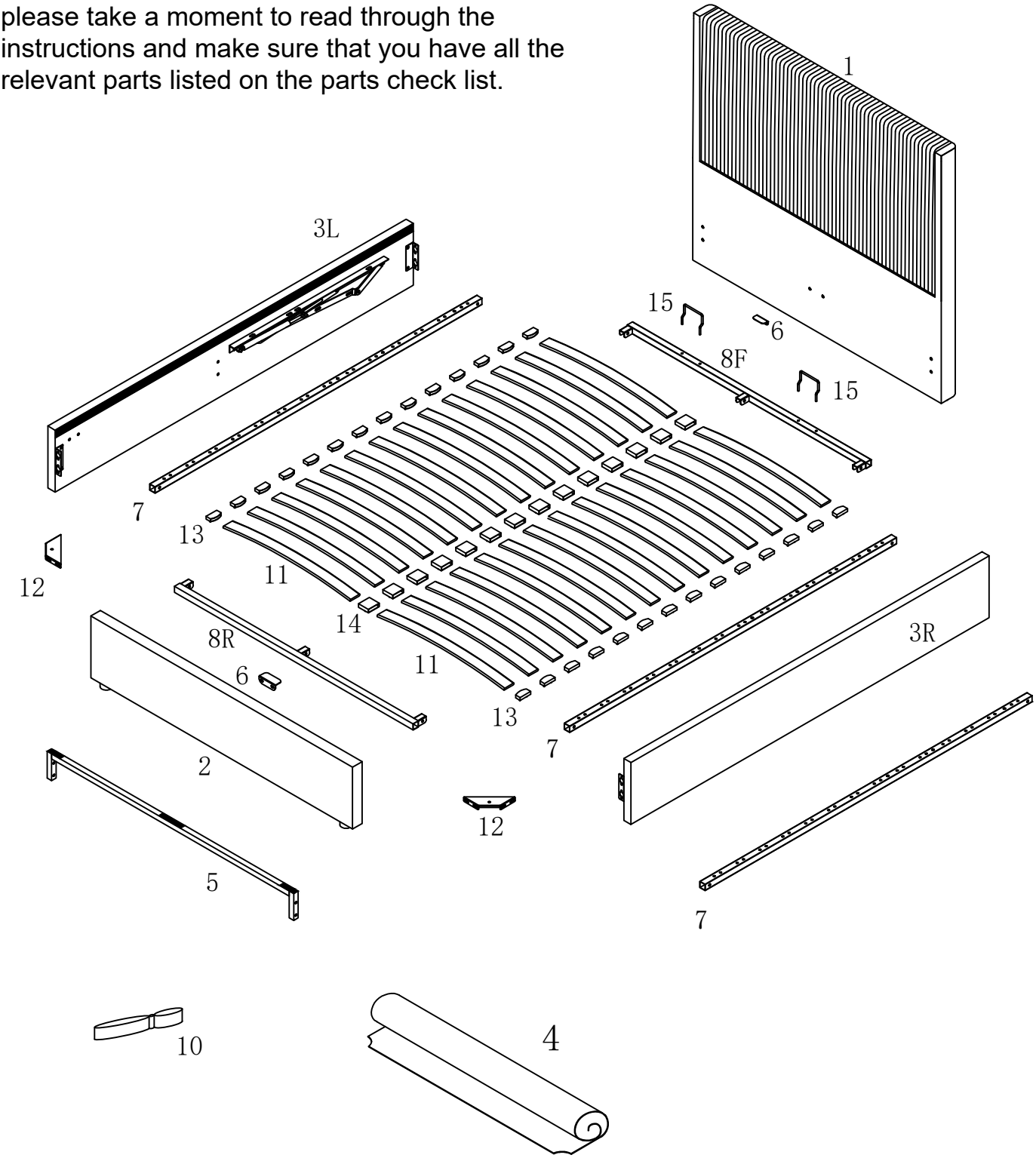

PART CHECK

No.	Parts List	Qty	Box No	No.	Parts List	Qty	Box No
1	Headboard	1PC	Box 1	10	Strap	1PC	Box 2
2	Footboard	1PC	Box 2	11	Slat Double	28PCS	Box 1
3L	Side Rail with Lift Mechanism-LH	1PC	Box 2	12	Angle Corner Bracket	2PCS	Box 1
3R	Side Rail with Lift Mechanism-RH	1PC	Box 2	13	Side Slat Cap Double	28PCS +3extra	Box 1
4	Fabric Base	1PC	Box 2	14	Centre Slat Cap Double	14PCS +2extra	Box 1
5	Central Support Rail	1PC	Box 2	15	Mattress Positioning Handle	2PCS	Box 1
6	Angle Iron	2PCS	Box 1				
7	Side and Centre Ottoman Metal Frame	3PCS	Box 2				
8R	Rear Ottoman metal Frame	1PC	Box 2				
8F	Front Ottoman metal Frame	1PC	Box 2				

Fittings (in Box 1)

Please check you have all the fittings listed below with your product.

Ⓐ M8*45mm Bolt 16PCS+2extra	Ⓑ M8*30mm Bolt 20PCS+2extra	Ⓒ M8 Nut 12PCS+2extra	Ⓗ Flat Washer 12PCS+1extra	Ⓔ Allen Key 1pc	Ⓕ Spanner 1pc

NB: there are additional spare Fittings included within the Fitting pack

Pre-assembled Parts Check List.

No.	Parts List	Qty	Box No	No.	Parts List	Qty	Box No
16L	Lift Mechanism-LH	1PC	Box 2	18	leg	2PCS	Box 1
16R	Lift Mechanism-RH	1PC	Box 2	18	leg	2PCS	Box 2
17	Gas Strut	2PCS	Box 2				

Pre-assembled Fittings.

Ⓒ M8 Nut 4PCS	Ⓓ Plastic Gasket 8PCS	Ⓐ M8*45mm Bolt 8PCS	Ⓑ M8*30mm Bolt 8PCS	Ⓖ M4*40mm 5PCS

Step 1:

Open the zipper behind the headboard and take out Slat(11) ,Slat Cap and Hardware accessories

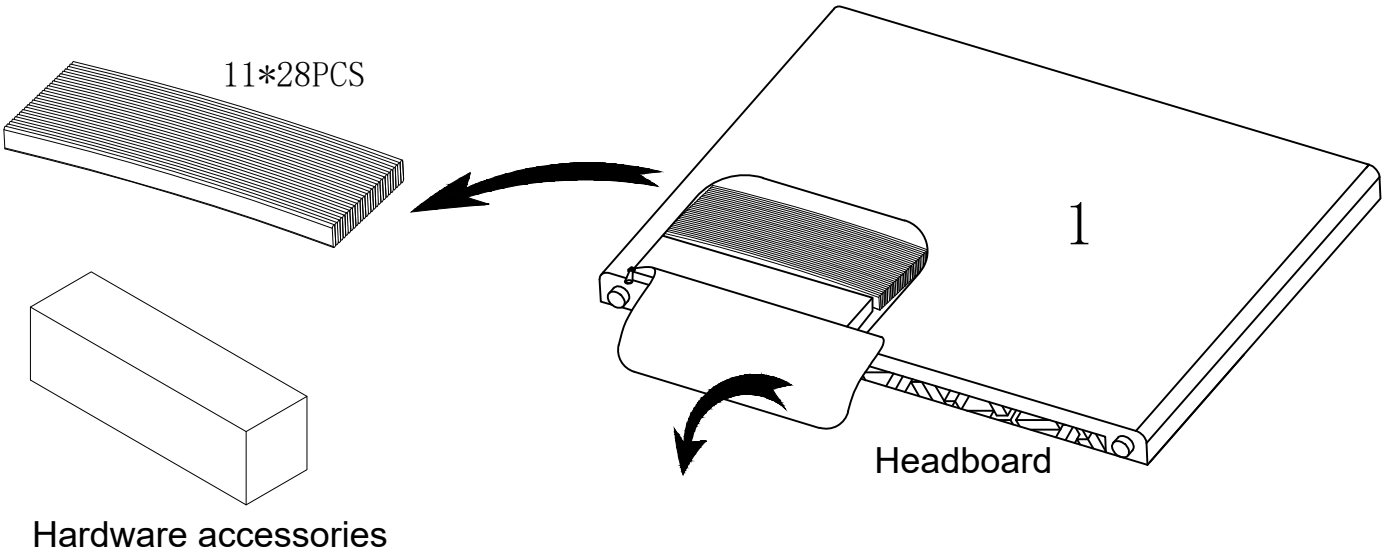

Step 2: Attaching the Angle Irons to the Headboard & Footboard

B 4pcs

E 1pc

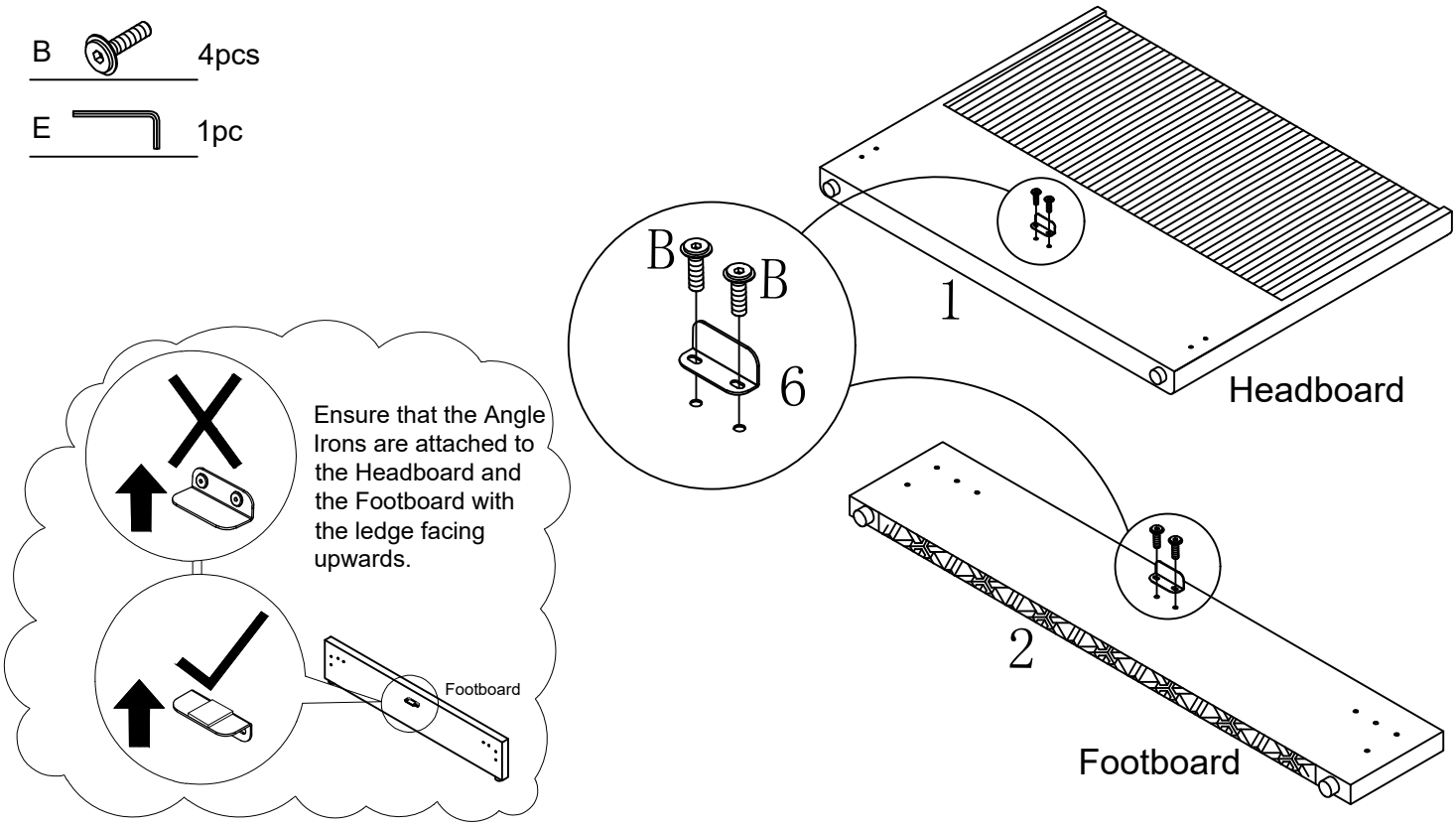

Step 3: Attaching the Headboard & Footboard to the Side Rails

B 8pcs

E 1pc

Headboard end

NB:Sude Rail Angle Irins are pre-attached

Footboard end

3L

B

E

3R

WRONG CORRECT

NB:Before tightening the bolts, please ensure the bed frame is square

NB:Attach the bottom Bolt first

Step 4: Attaching the Angle Corner Brackets

B 8pcs

E 1pc

B B B B

12

3L

3R

Step 5: Attaching the Central Support Rail

A 4pcs

E 1pc

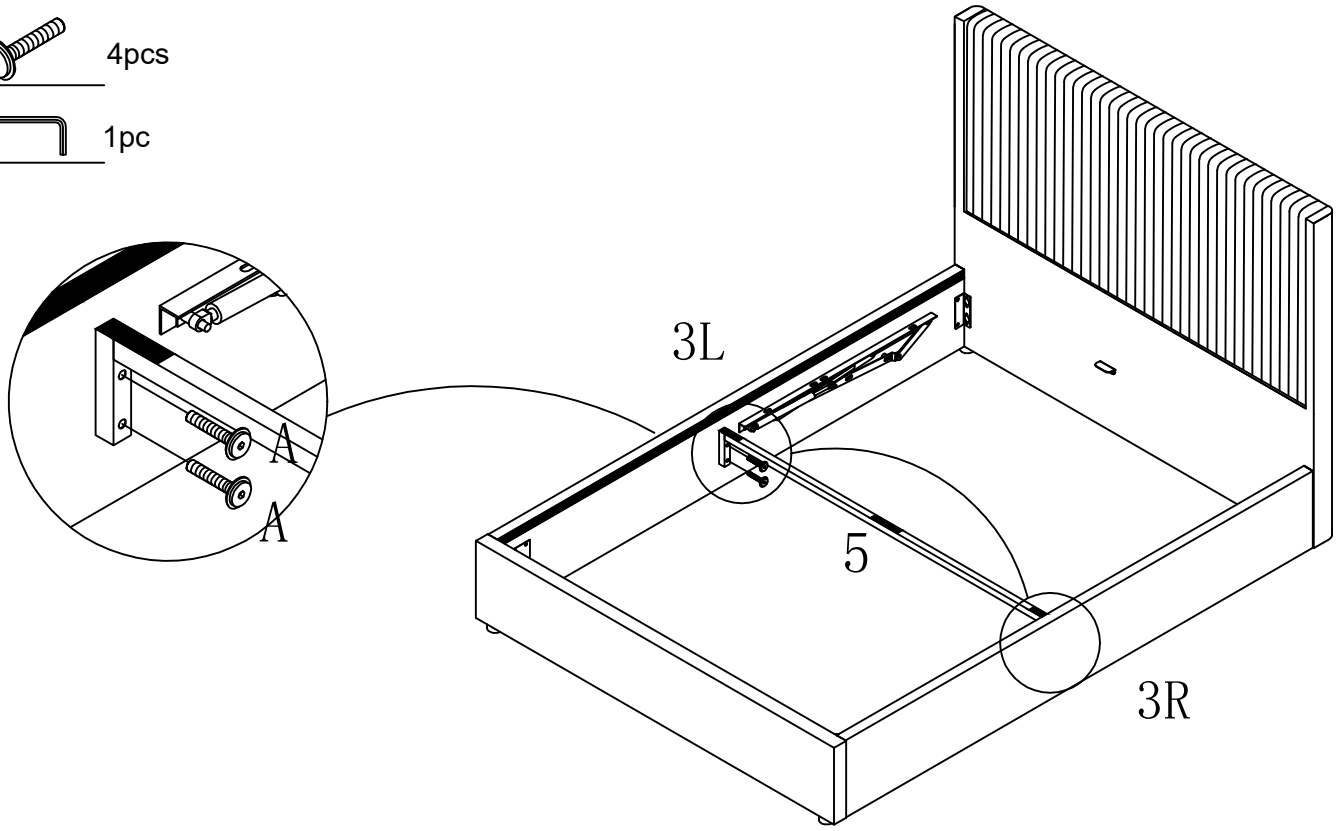

Step 6: Fabric Base Attachment

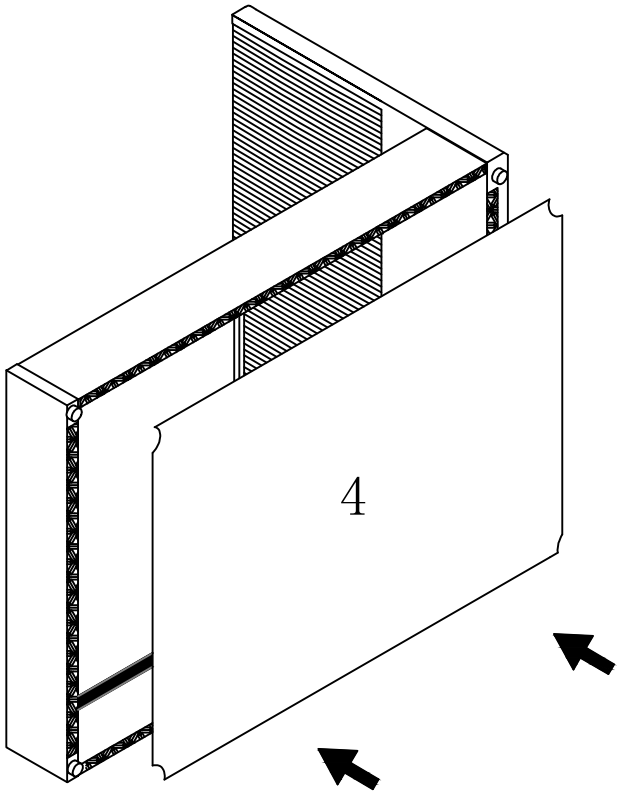

With an assistant, carefully lift both the Headboard & Footboard at the same time, do not let the bed frame twist. Lift and turn the bed frame on its side holding the bed upright for safety. Attach the Fabric Base (4) to bottom of the Side Rails, Headboard & Footboard with the velcro tape. Ensure the fabric is fixed evenly all round.

Step 7: Constructing the Ottoman Metal Frame

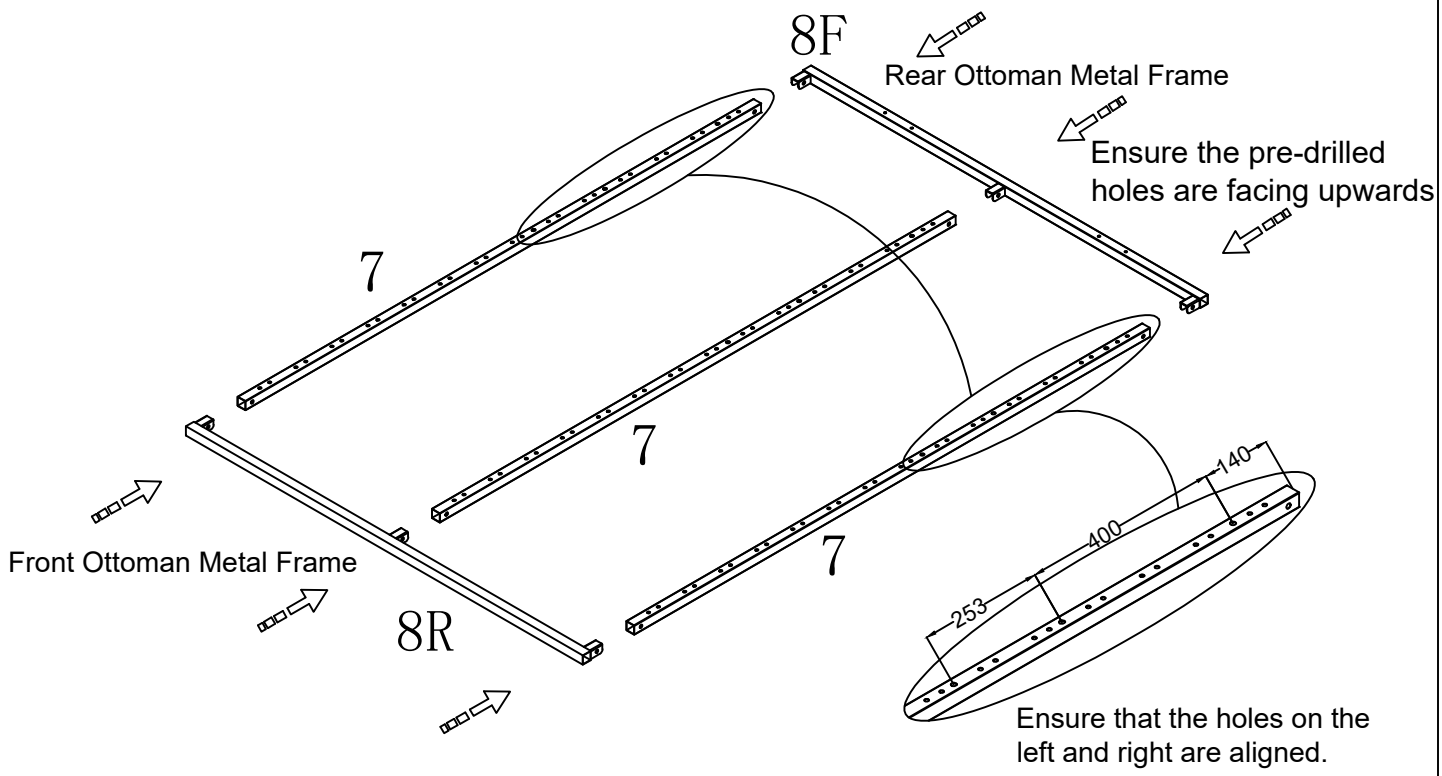

Step 8: Constructing the Ottoman Metal Frame

A		6pcs
C		6pcs
H		6pcs
E		1pc
F		1pc

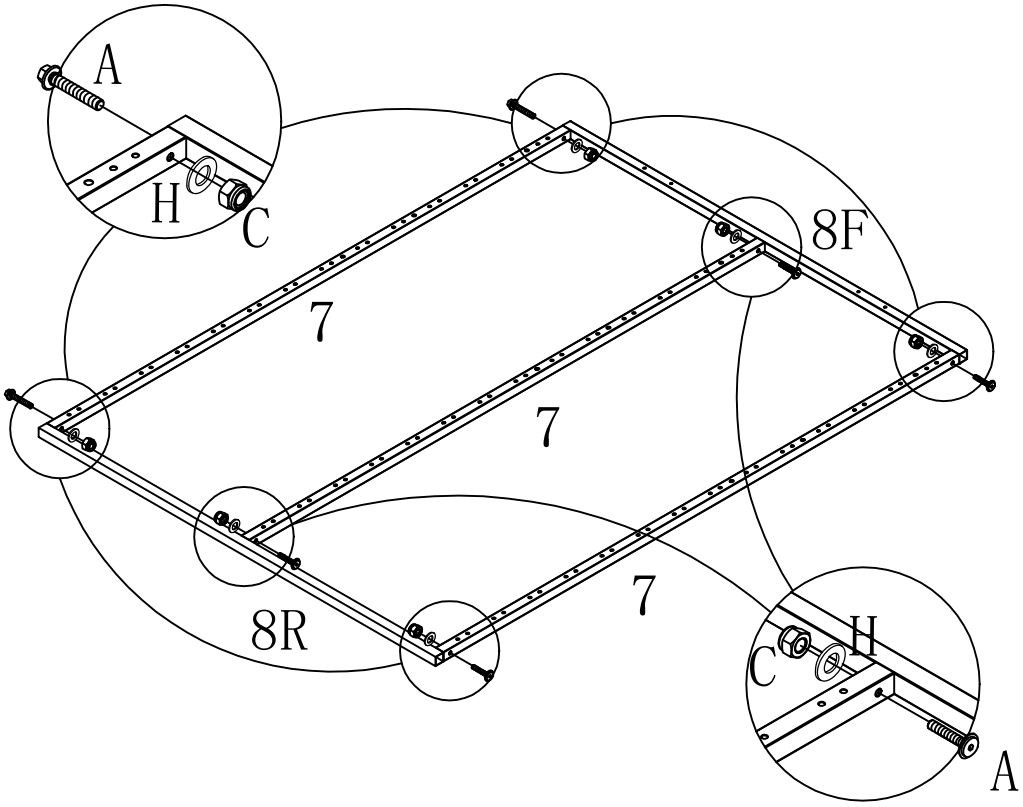

Step 9: Attaching the Side and Centre Ottoman Metal Frame to Side Rail with Lift Mechanism-LH and Side Rail with Lift Mechanism-RH

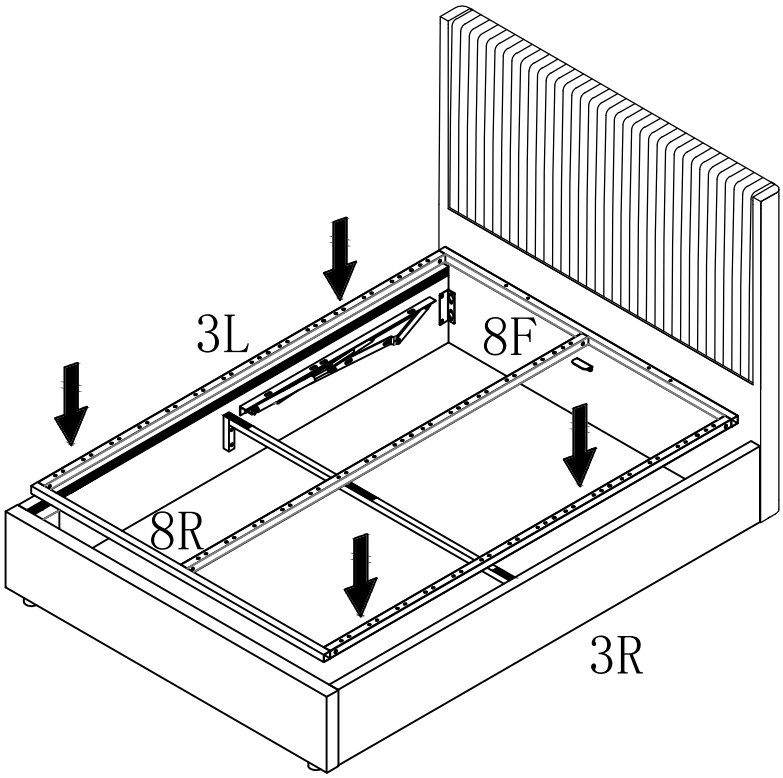

Step 10: Attaching the Lift Mechanism-LH & Lift Mechanism-RH to the Side and Centre Ottoman Metal Frame.Connect using screw A.

A 6pcs

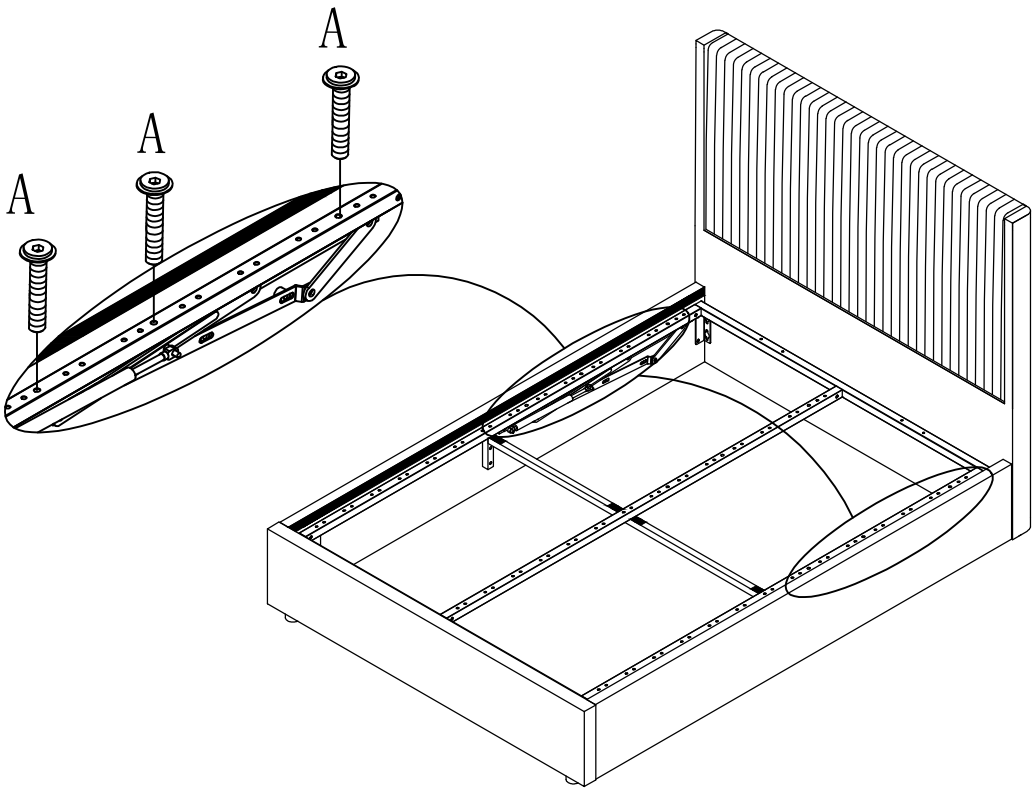

Step 11: Screw the Ottoman Metal Frame to each Lift Mechanism

C		6pcs
H		6pcs
E		1pc
F		1pc

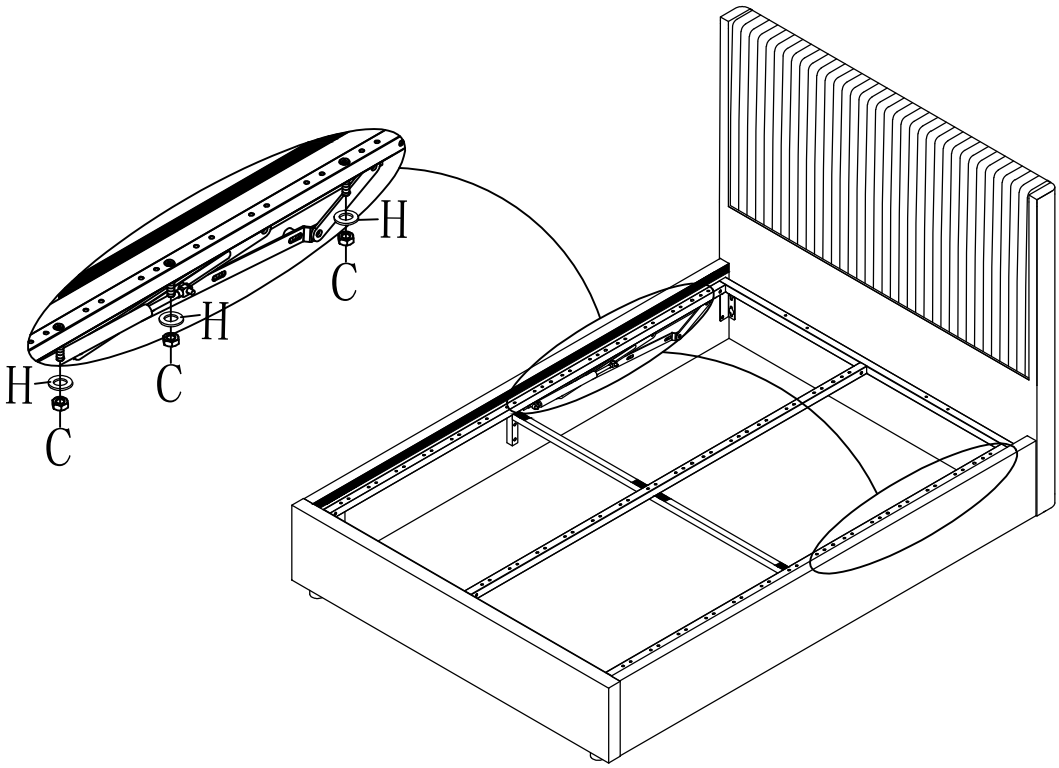

Step 12: Attaching the Gas Stuts to Lift Mechanisms

F		1pc

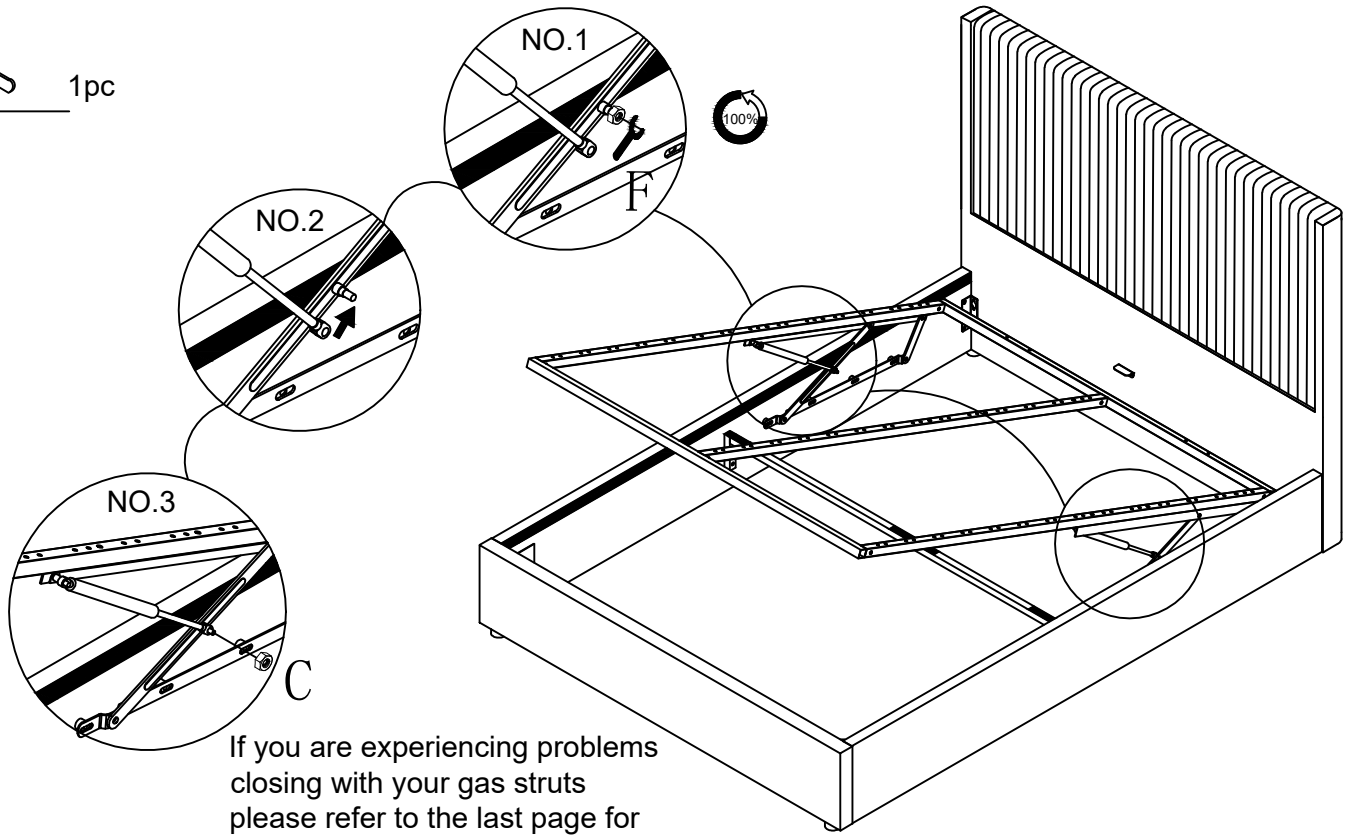

If you are experiencing problems closing with your gas struts please refer to the last page for gas strut trouble shooting.

Step 13: Attaching the Slat Caps to the Ottoman Bed Frame

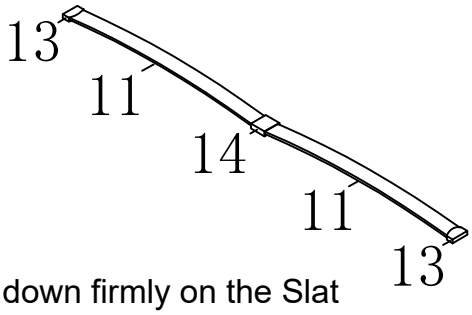

Push down firmly on the Slat Caps into the pre-drilled holes on the Ottoman Metal Frame. It is recommended to push the Centre Slat Caps into position before pushing down on the Side Slat Caps.

Insert both Mattress Positioning Handles (15).

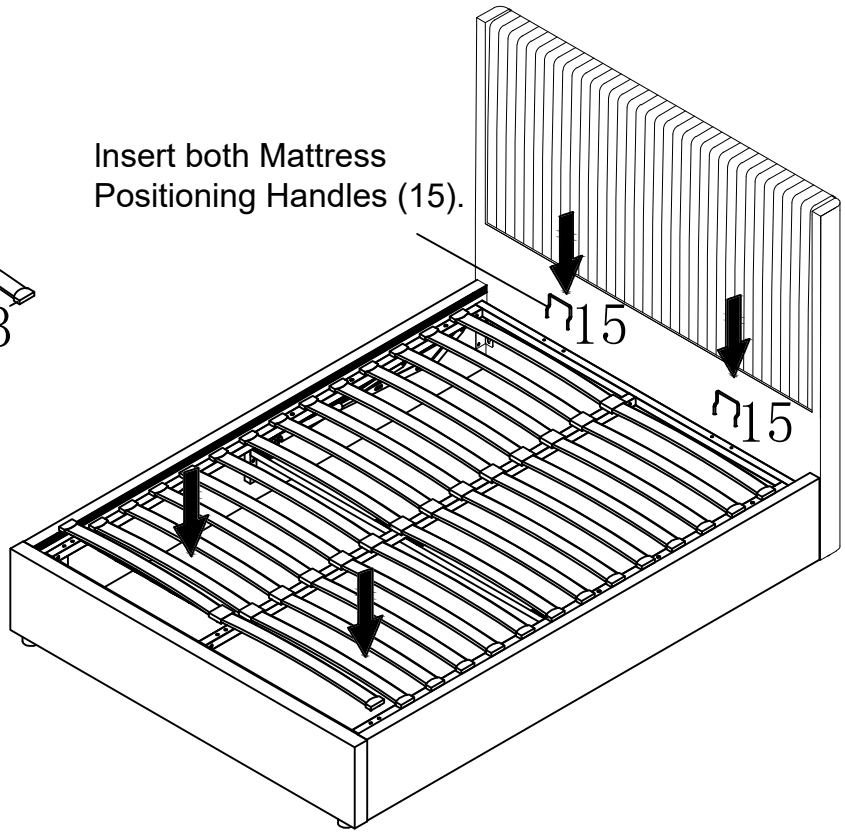

Step 11:

Attaching the Strap to the Rear Ottoman Metal Frame

Attach the Strap (10) to the Center Ottoman Metal Frame, at the Footboard end.

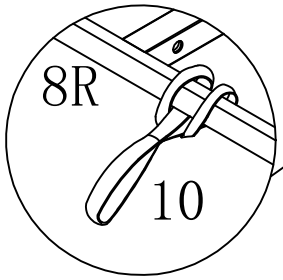

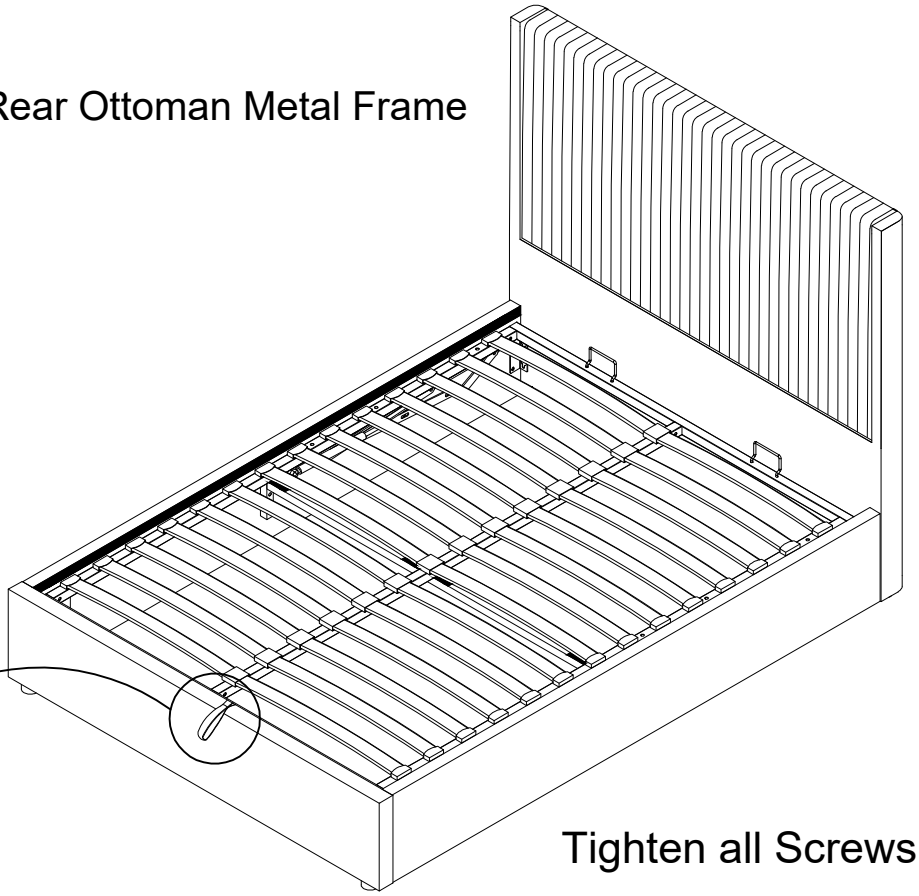

Tighten all Screws

Care and Maintenance

Here are some good tips to keep your new ottoman bed frame in tip-top condition.

Cleaning

To clean your new ottoman bed frame, we advise using a damp cloth if the fabric is dusty or a low suction vacuum. Do not use abrasive chemicals or bleach as this may damage the product.

Checking and Moving

Periodically, we recommend you check that the screws and fixtures haven't become loose over time. To move your bed frame, we recommend lifting it where possible, as dragging or pushing it could cause damage to the legs or flooring.

Fabric

Please note, depending on the lighting, positioning and surroundings of your room, the shade of the fabric will appear differently. Over a period of time, the fabric may also lighten or fade slightly due to light exposure.

Gas strut/piston best use:

• Use caution when operating - always use two hands.

• Only attempt to close the ottoman frame, once the mattress has been placed on the frame. The thicker side of the cylinder should be above the thinner side - this will increase longevity ofthe part.

• Only attempt to close the frame with two hands from the footboard side, slowly increasing the pressure until the frame starts moving downwards.

• Closing the frame for the first time may be difficult, as the cylinder needs cycling and lubricating. After closing for the first time, open and close a further 5 times.

• If the frame is stuck open and unable to be closed, we recommend getting assistance from a second person, both applying equal pressure from each side of the footboard until the frame closes, this may require more force than expected. Stop applying pressure if the metal frame begins to warp – contact customer services at this point.

Top tips:

• Do not attempt to close the gas strut/piston by hand, it can only be compressed once added to the frame

• Ensure the frame can move freely before adding the gas struts/pistons

• Check the frame is fully square, being offset can cause the frame to catch on the side rail