DUSK.COM

LIVING I BEDROOM I DINING

Range Name : Mila
Box1 Dimension :W201xD69xH18cm
Box2 Dimension :W210.5xD69xH13.5cm
Product Dimension : W150xD60xH200cm

3 Door Wardrobe

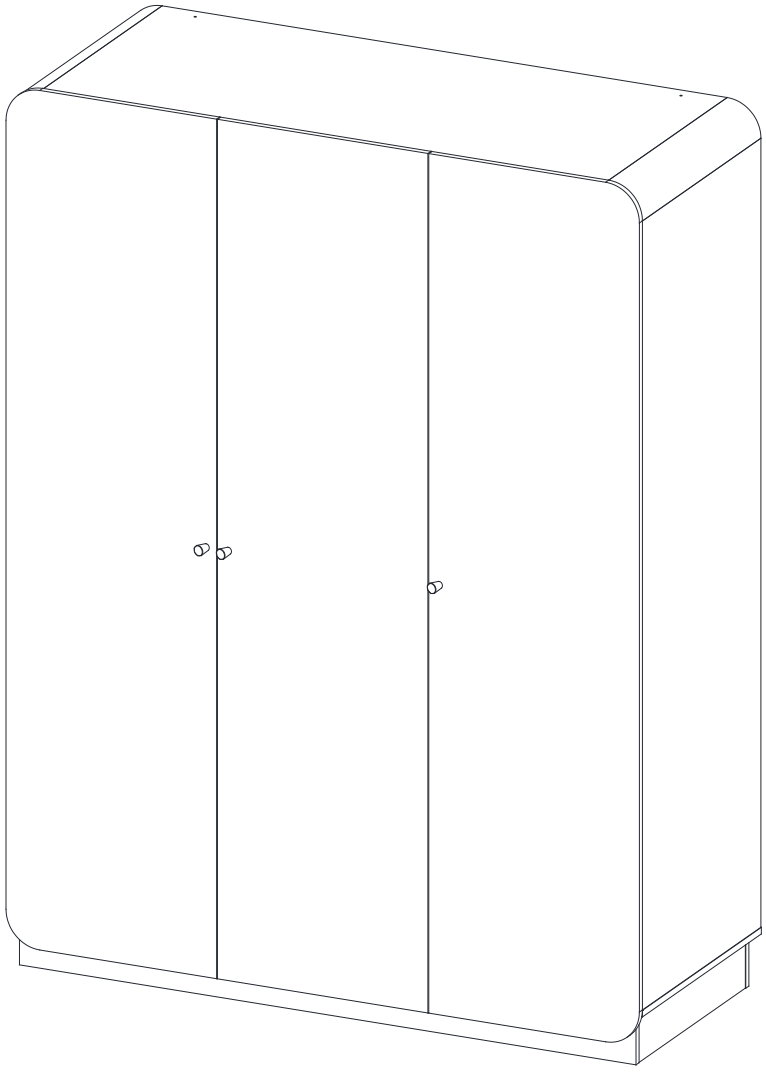

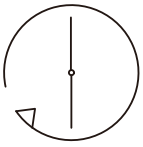

Up to 120 minut
es assembly time

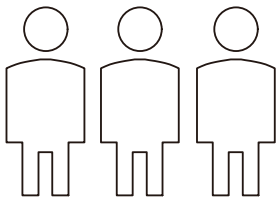

Three person
assembly



Electric screwdriver
prohibited

This product is intended for domestic use only,not for commercial purposes.

P-1-21
V-1.0

IMPORTANT

ASSEMBLY TIP

Before you begin, it's best to identify all of the parts and fittings to build your Mila 3 Door Wardrobe fr ame. We advise laying these out on the floor to check you have everything, and to familiarise yoursel f with all of the parts and fittings before building.

TOP TIP

We recommend that you assemble the Mila 3 Door Wardrobe in the room you'd like it to be located. This will help prevent any risk of damage to the frame whilst moving it.

SAFETY AND CARE

It's important to ensure children and animals are kept away from the assembly area, as there are small components used in this product which could present a choking hazard. All plastic and wrapping materials should also be kept away from children and animals to prevent any risk of suffocation.

HELP AND SUPPORT

Please contact our customer service team on 0113 519 0311 if you have any questions or issues with your purchase.

RECYCLING

Please ensure that packaging is disposed of in a safe and environmentally friendly way, and recycle where possible. Please keep your assembly instructions safe to refer back to in the future.

CARE AND MAINTENANCE:

1. Only clean using a damp cloth, do not use bleach or abrasive cleaners as they may damage the finish over time.

2. Do not use a very wet cloth or allow any liquid to contact with the veneer for a long period of time. Wipe any spillage immediately. Absorption can cause wood to warp or finishes to de-laminate.

3.Do not scrub or rub the surface when cleaning.

4. Do not drag the Mila 3 Door Wardrobe when moving, lift it off the floor instead.

5. Use a placemat or a coaster when putting hot items (e.g. hot drinks and dishes) on the wood surface.

6. It is not recommended to place the item next to sources of heat such as radiators, fires or directly exposed to sunlight. This may cause the wood to crack, split or fade due to the heat and humidity.

7. Wood will mellow and change colour over time, we recommend that ornaments and items placed on the surface to be moved regularly to prevent uneven mellowing.

8. Regularly check all fixings to ensure none have come loose. Re-tighten if necessary.

9. Avoid sharp items such as a screwdriver or any pointy tools.

10. Dispose of all packaging carefully and responsibly - recycle where possible.

Parts list

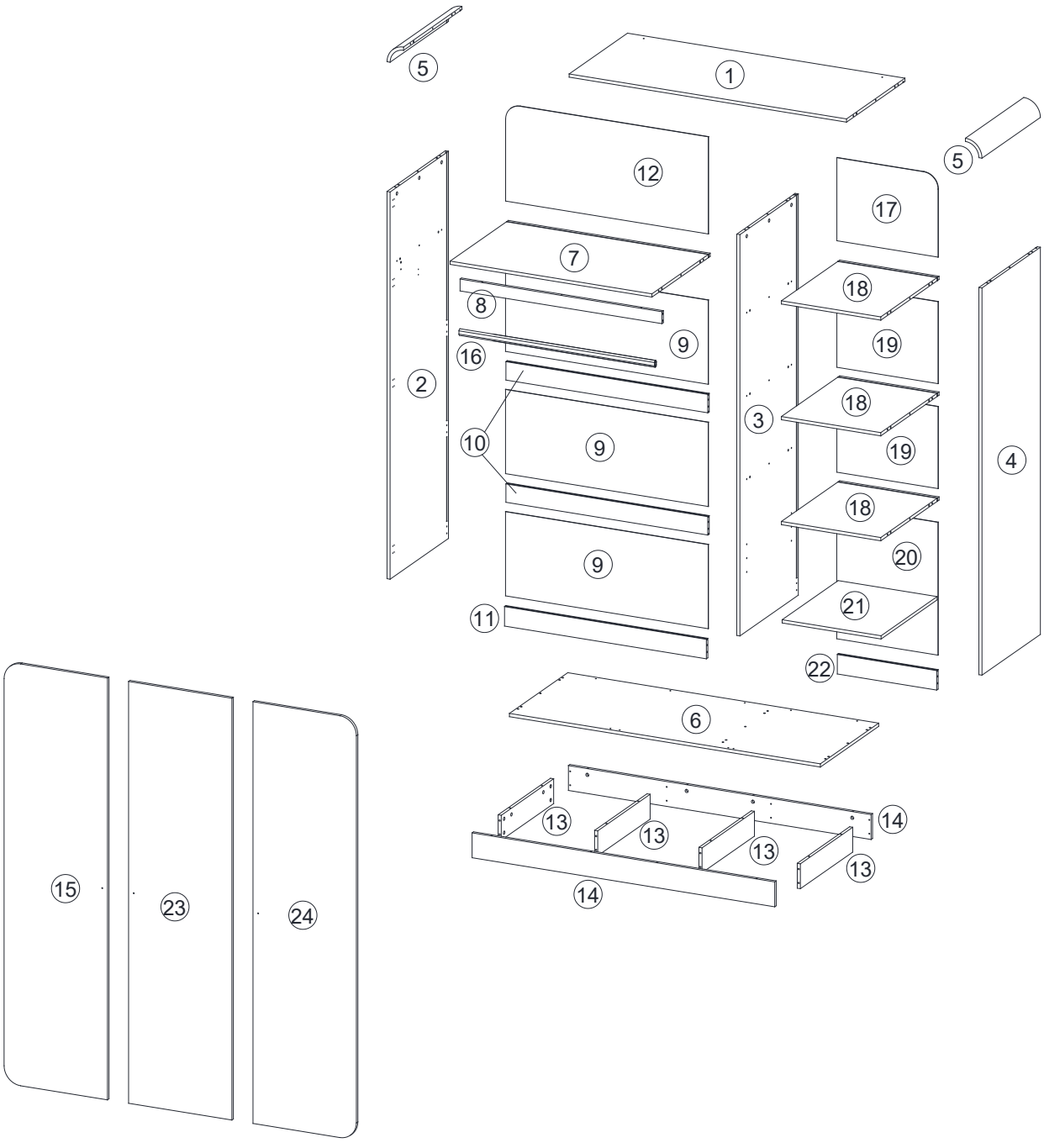
5
1
12
5
17
7
18
8
9
19
16
2
18
3
10
9
19
4
18
20
9
21
11
22
6
13
13
13
14
13
14
15
23
24

Parts list

Before you begin building you Mila 3 Door Wardrobe,please take a moment to read through the instructions and make sure that you have all the relevant parts listed on the parts check list.

Part Number	Part Description	Quantity	Box No
①	Top Panel	1pc	Box 1
②	Left Side Panel	1pc	Box 2
③	Middle Panel	1pc	Box 1
④	Right Side Panel	1pc	Box 2
⑤	Rounded Corners	2pcs	Box 1
⑥	Bottom Panel	1pc	Box 1
⑦	Shelf	1pc	Box 1
⑧	Support Rail	1pc	Box 1
⑨	Back Panel	3pcs	Box 1
⑩	Back Rail	2pcs	Box 1
⑪	Back Rail	1pc	Box 1
⑫	Back Panel	1pc	Box 1
⑬	Leg Rail	4pcs	Box 1

Number	Part Description	Quantity	Box No
⑭	Leg Rail	2pcs	Box 1
⑮	Left Door	1pc	Box 2
⑯	Clothes Rail	1pc	Box 1
⑰	Back Panel	1pc	Box 1
⑱	Shelf	3pcs	Box 1
⑲	Back Panel	2pcs	Box 1
⑳	Back Panel	1pc	Box 1
㉑	Shelf	1pc	Box 1
㉒	Back Rail	1pc	Box 1
㉓	Middle Door	1pc	Box 2
㉔	Right Door	1pc	Box 2

Fittings

Please check you have all the fittings listed below with your product in box 1.

A 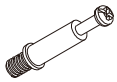 M6*35mm Bolt 89pcs+8pcs extra	B  15*10mm Cam Lock 89pcs+8pcs extra	C 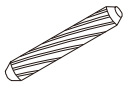 8*30mm Dowel 34pcs+3pcs extra	D 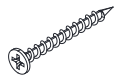 M4*40mm Screw 7pcs	E  M4*14mm Screw 4pcs
F 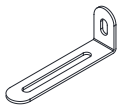 Wall Bracket 2pcs	G  M3*16mm Screw 58pcs+5pcs	H 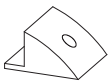 Plastic Buckle 50pcs+5pcs	I  M7*40mm Screw 9pcs	J 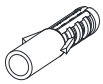 Wall Plug 2pcs
K  Handle 3pcs	L  M4*18mm Bolt 3pcs	M 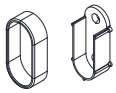 Clothes Tray 2pcs	N  M3.5*14mm Screw 76pcs+7pcs	O  Allen Key 1pc
P 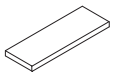 Pad 8pcs	Q 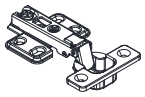 Hinge 12pcs	R 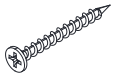 M4*50mm Screw 3pcs	S 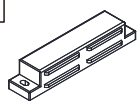 Magnet 2pcs	T  Metal plate 6pcs
U  M3*12mm Screw 6pcs	V  Shelf Pin 4pcs	W 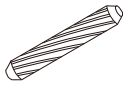 8*50mm Dowel 2pcs	X 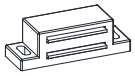 Magnet 2pcs	

1. Attach parts to the boards.

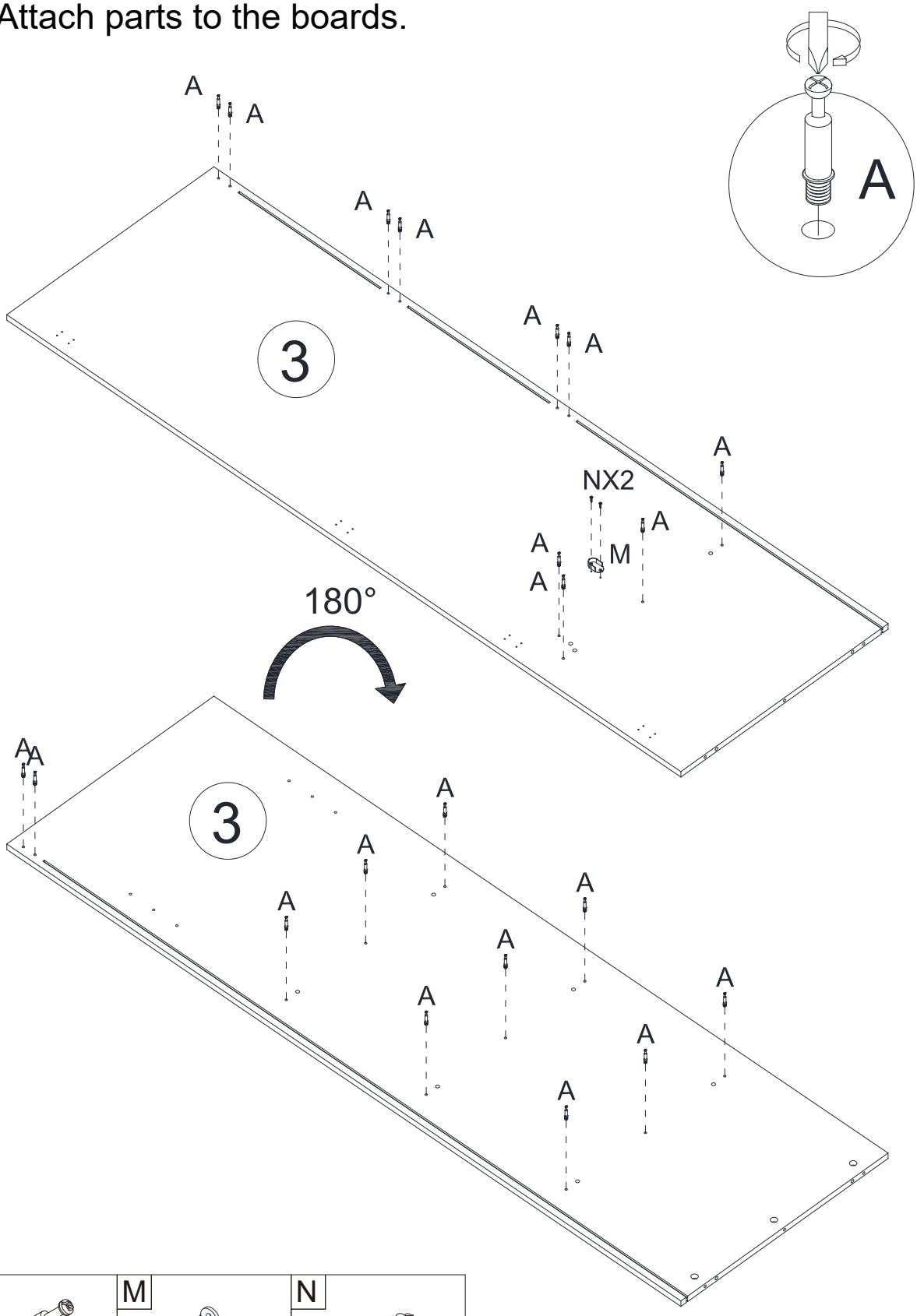

A	M	N
M6*35mm Bolt	Clothes Tray	M3.5*14mm Screw
21pcs	1pc	2pcs

P-6-21
V-1.0

2.Assemble wall bracket to the board.

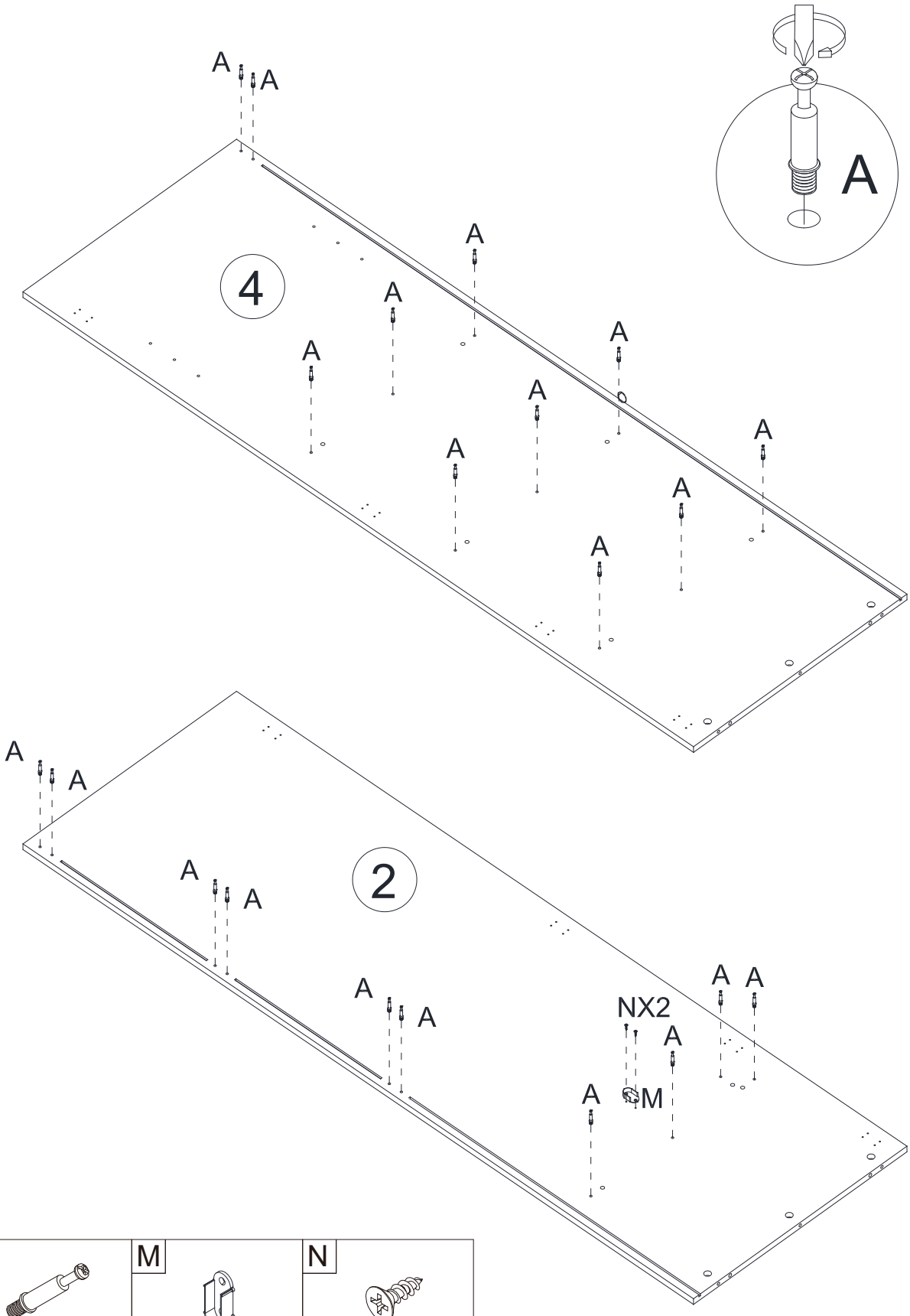

A	M	N
M6*35mm Bolt	Clothes Tray	M3.5*14mm Screw
21pcs	1pcs	2pcs

P-7-21
V-1.0

3.

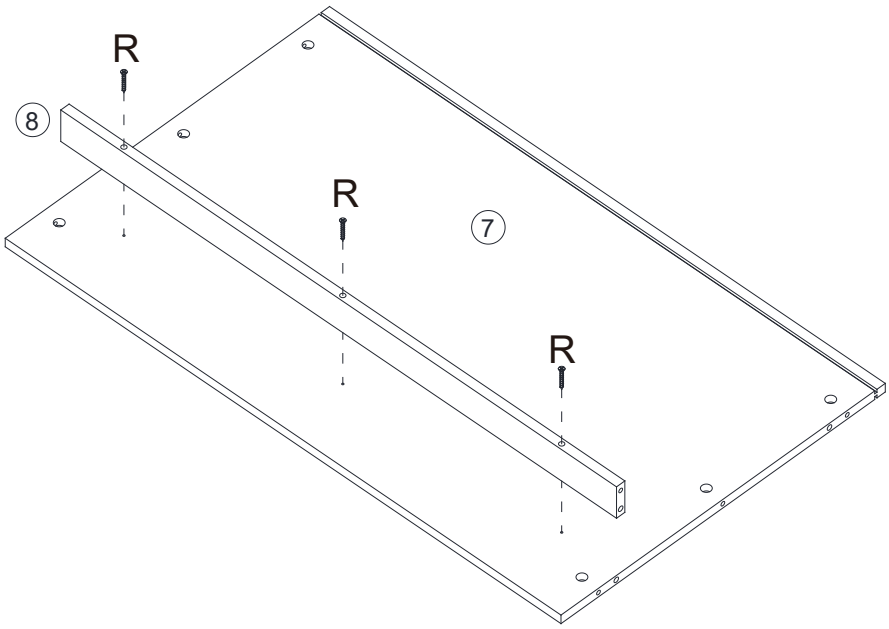

R
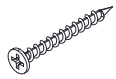
M4*50mm Screw
3pcs

4.

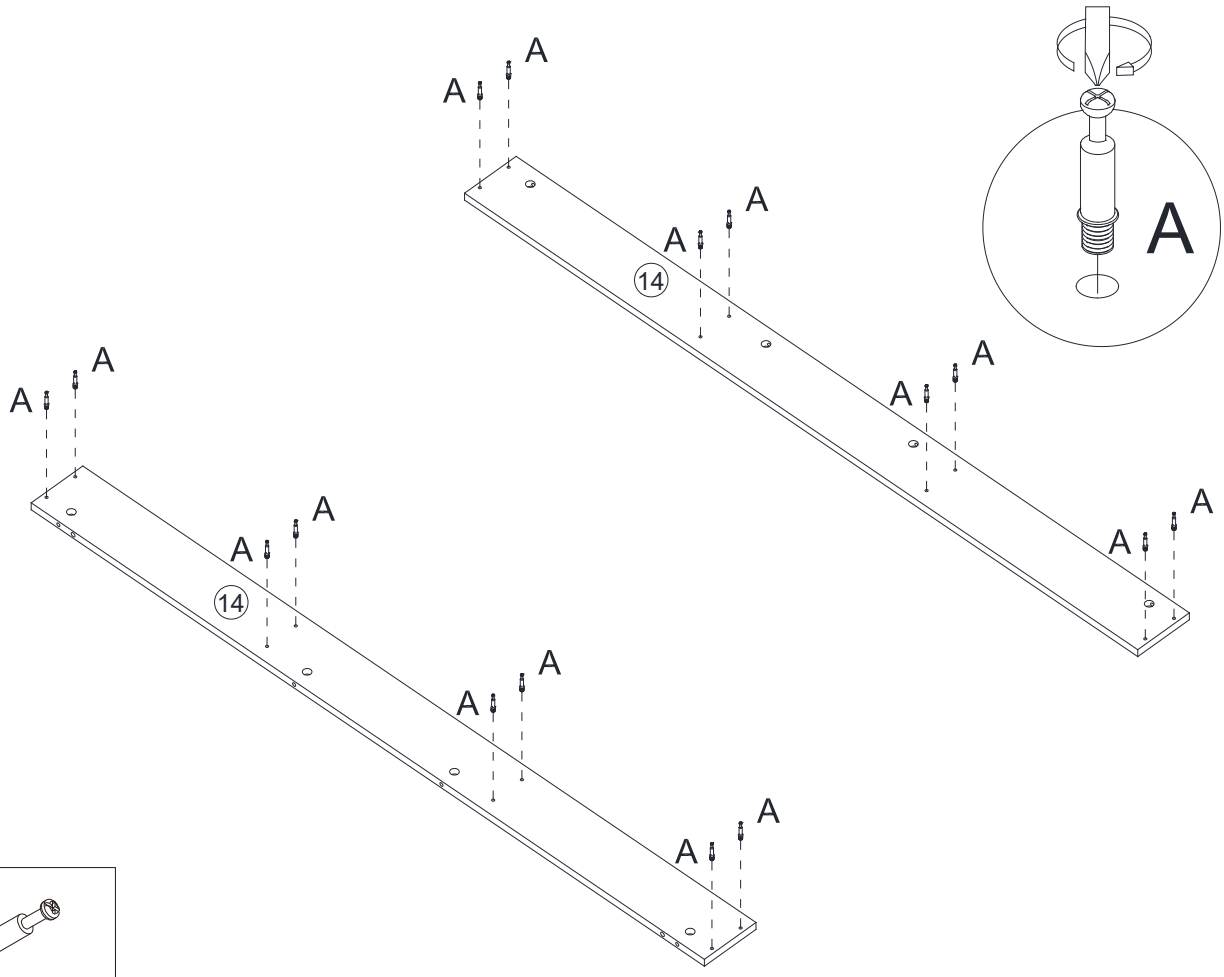

A
M6*35mm Bolt
16pcs

P-8-21
V-1.0

5.Assemble boards to the frame.

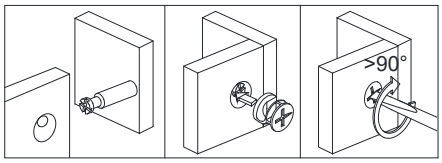

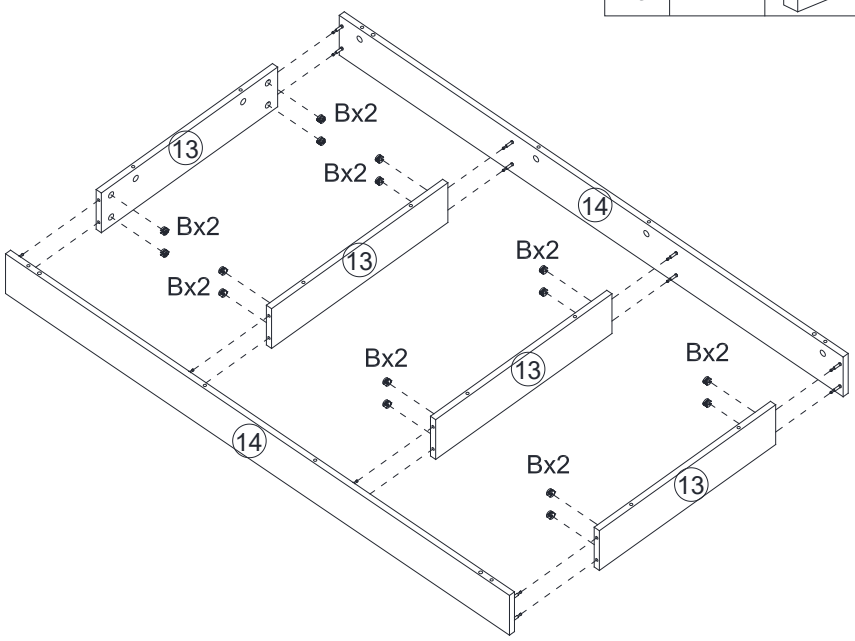

B

15*10mm Cam Lock
16pcs

6.

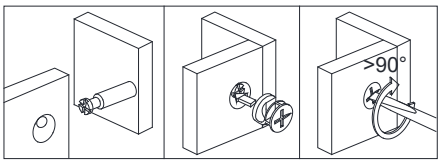

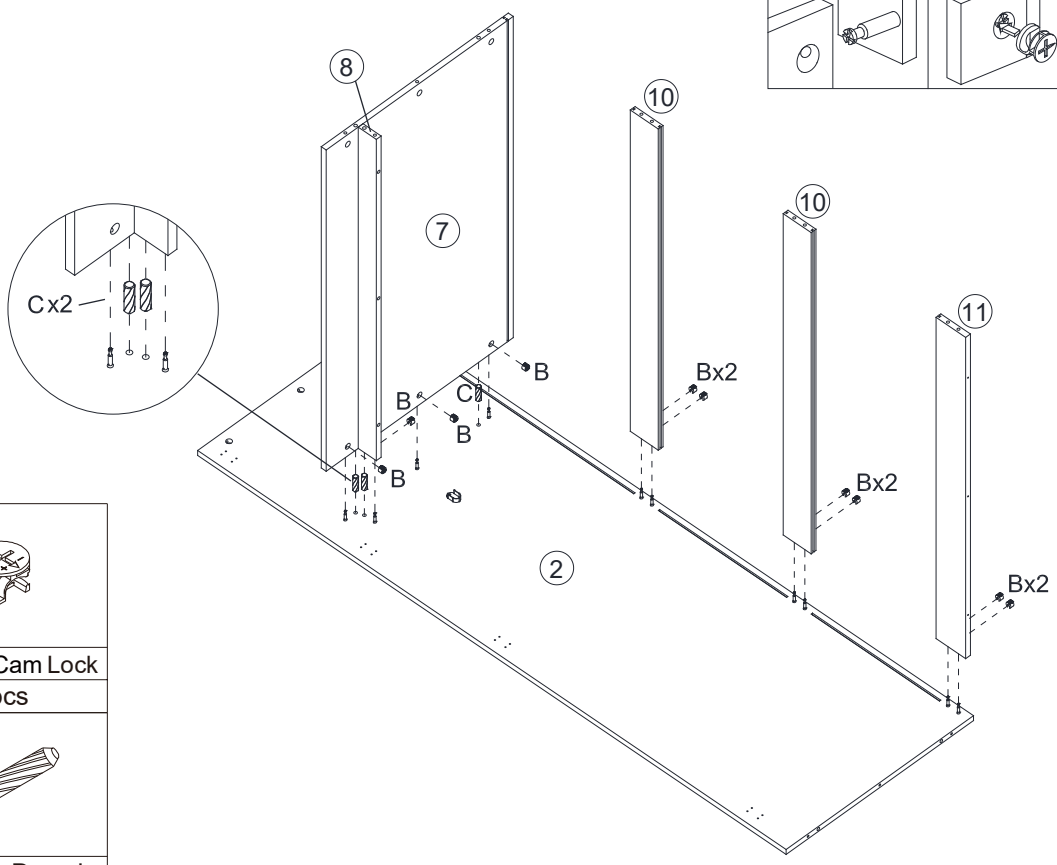

B

15*10mm Cam Lock
10pcs
C
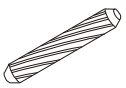
8*30mm Dowel
3pcs

P-9-21
V-1.0

7.

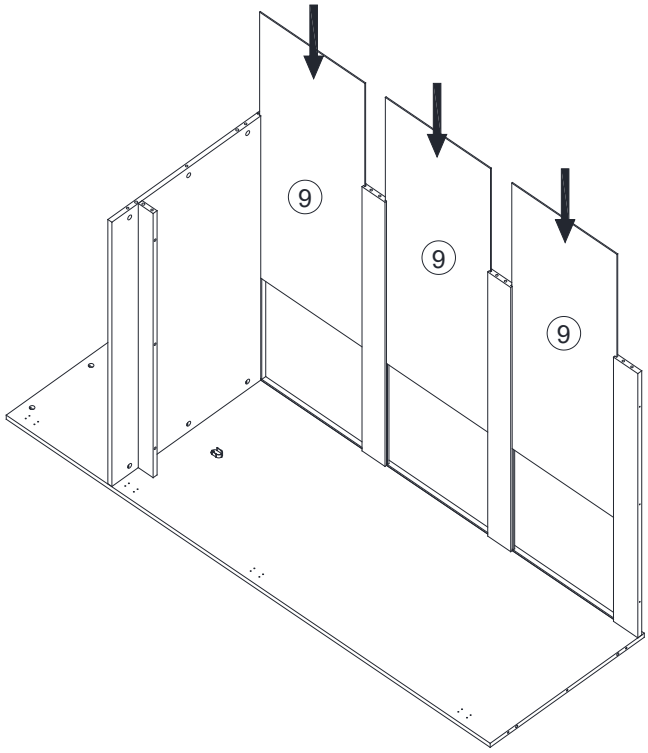

8.

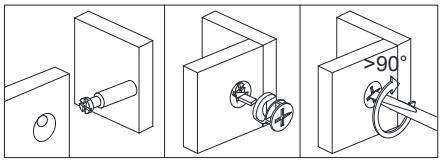

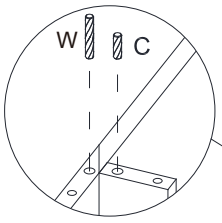

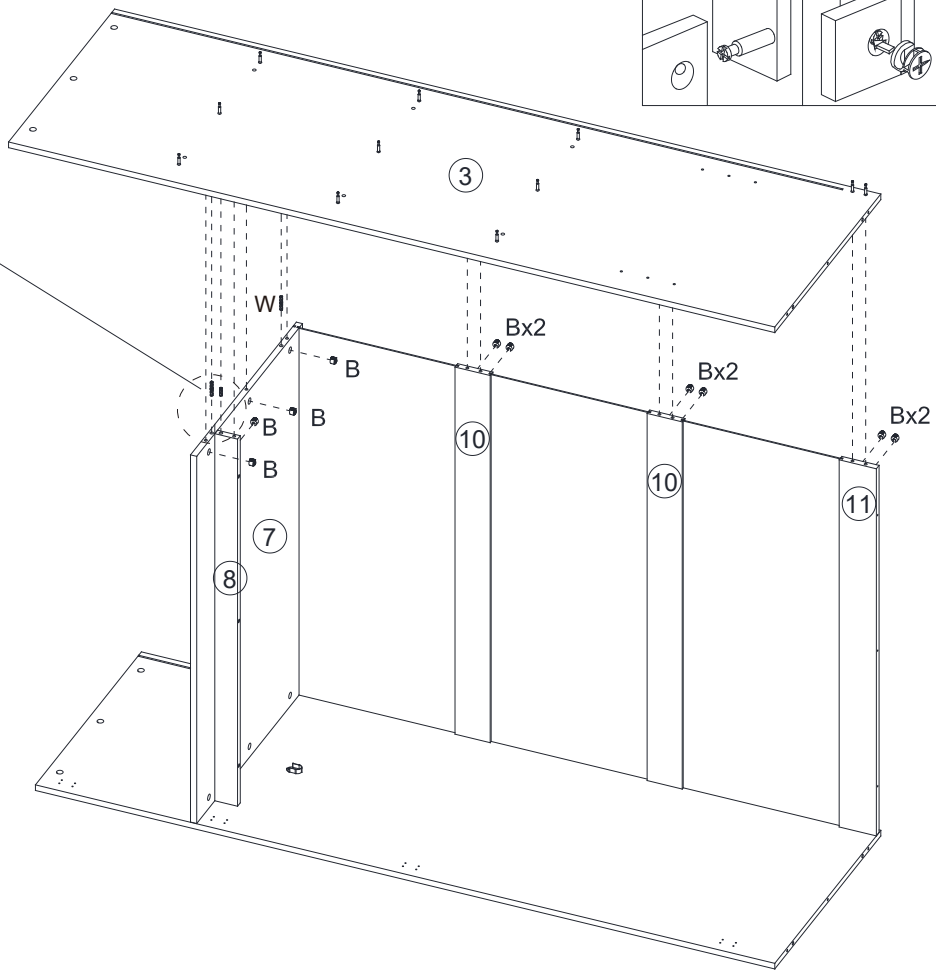

W 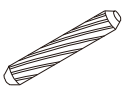	
8*50mm Dowel	2pcs
B 	
15*10mm Cam Lock	10pcs
C 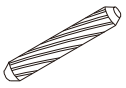	
8*30mm Dowel	1pcs

P-10-21
V-1.0

9.

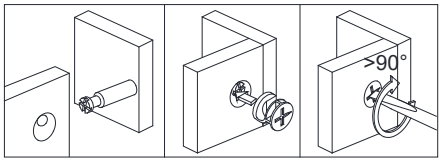

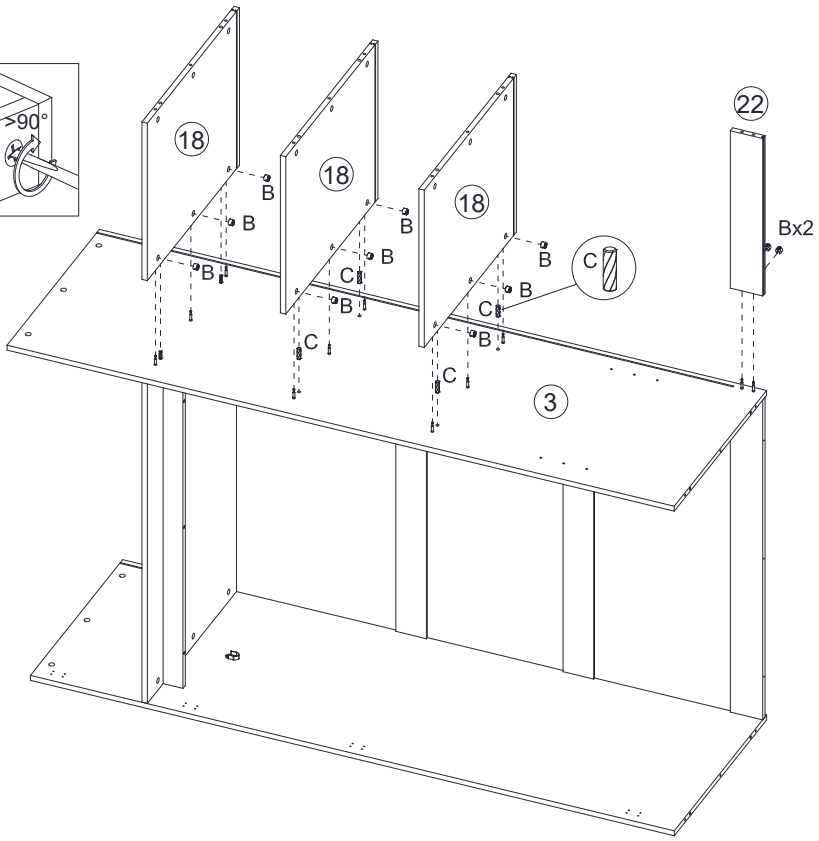

B

15*10mm Cam Lock
11pcs

C
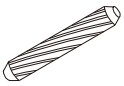
8*30mm Dowel
4pcs

10.

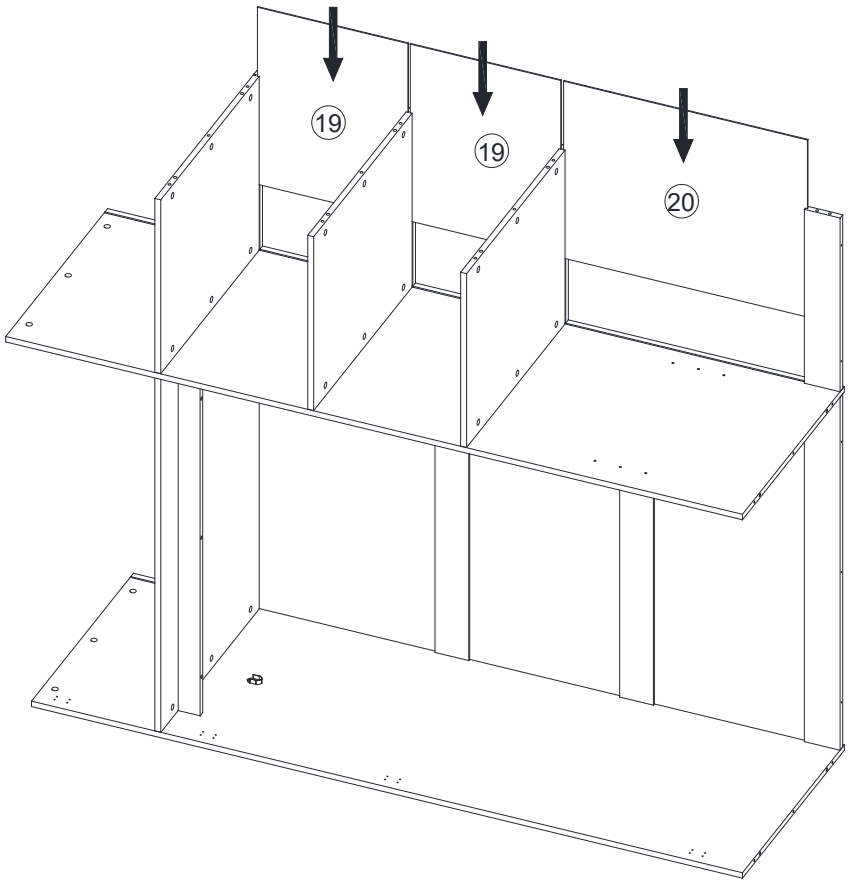

P-11-21
V-1.0

11.

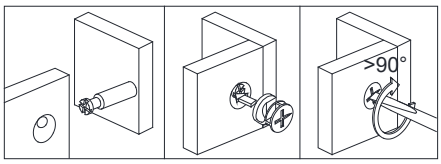

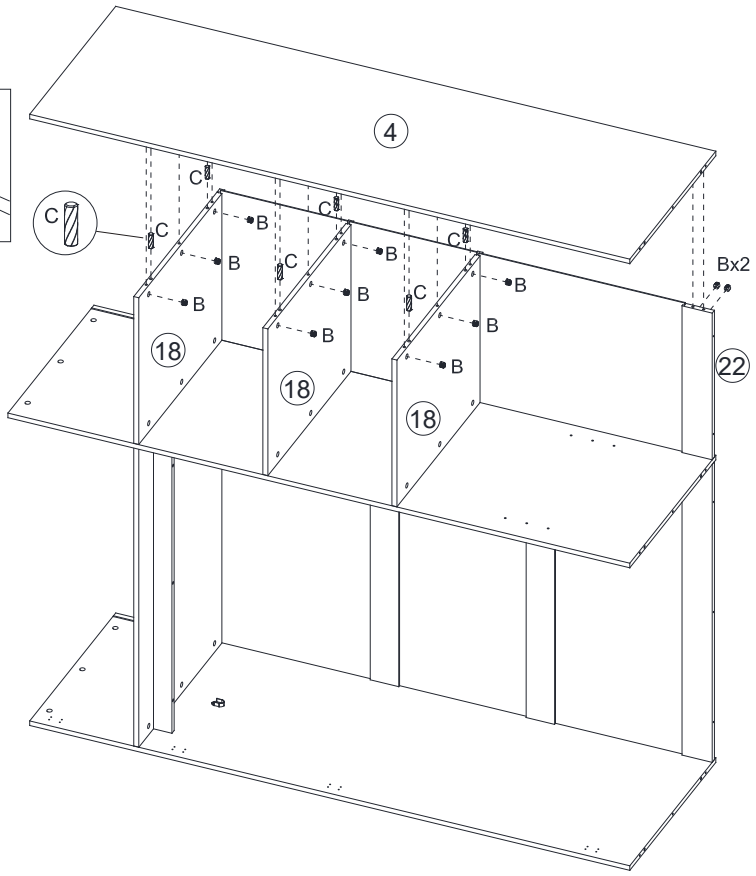

B

15*10mm Cam Lock
11pcs

C
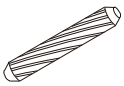
8*30mm Dowel
6pcs

12.

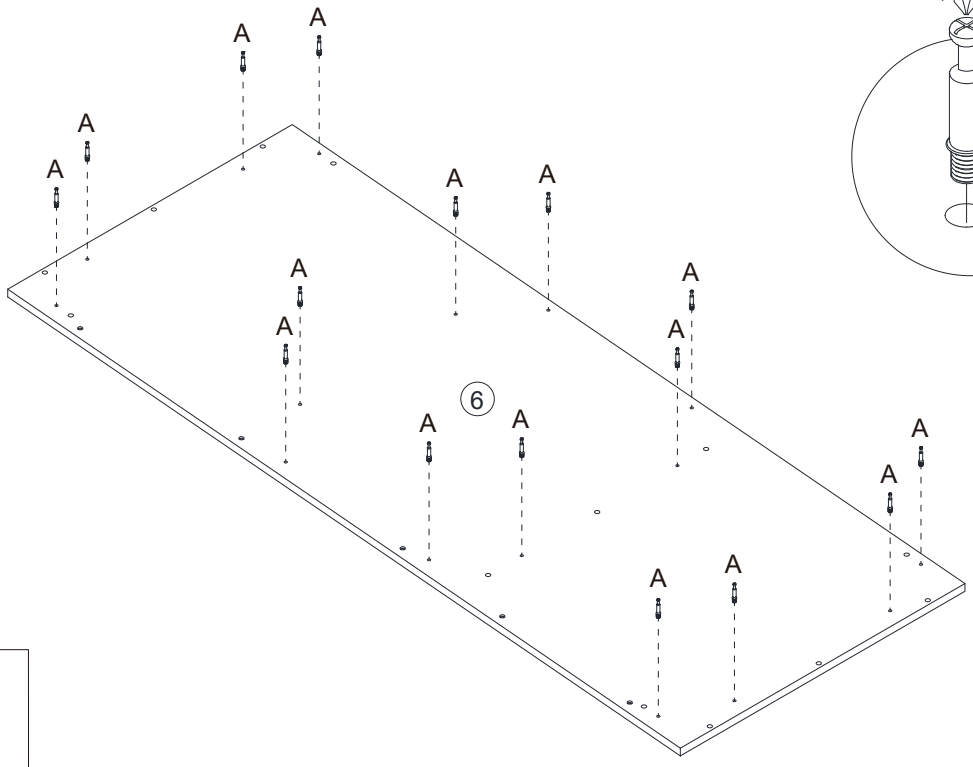

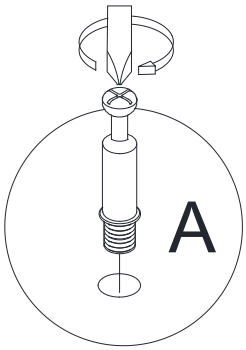

A
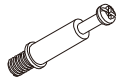
M6*35mm Bolt
16pcs

P-12-21
V-1.0

13.



D	C	I	O
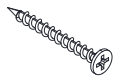	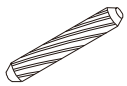		
M4*40mm Screw	8*30mm Dowel	M7*40mm Screw	Allen Key
5pcs	6pcs	9pcs	1pc

14.

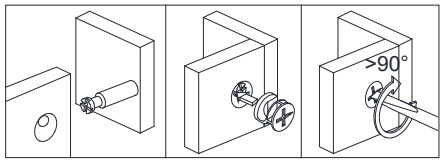

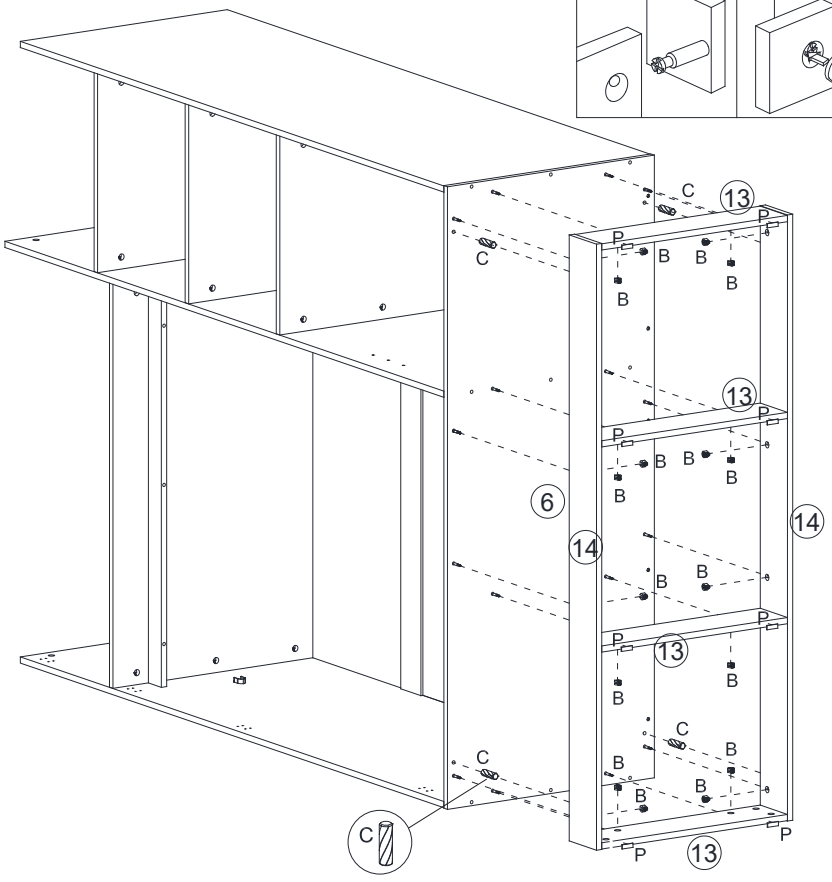

B	C	P
	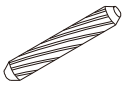	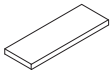
15*10mm Cam Lock	8*30mm Dowel	Pad
16pcs	4pcs	8pcs

P-13-21
V-1.0

15.

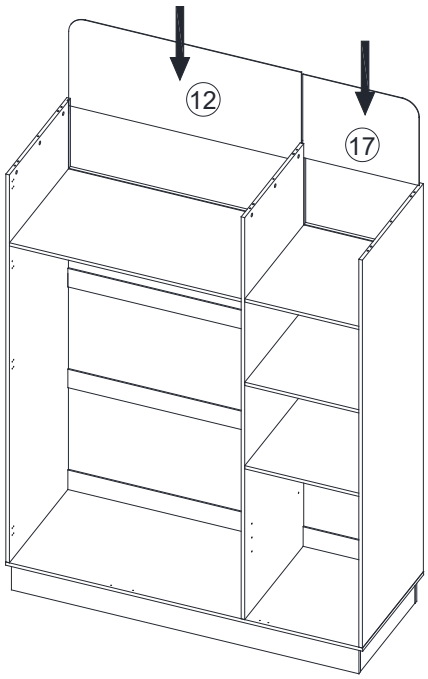

16.

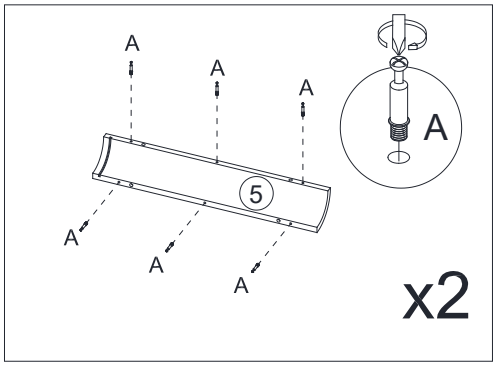

A 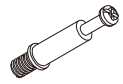	
M6*35mm Bolt	
12pcs	
E 	
M4*14mm Screw	
4pcs	
F 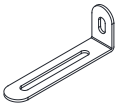	
Wall Bracket	
2pcs	

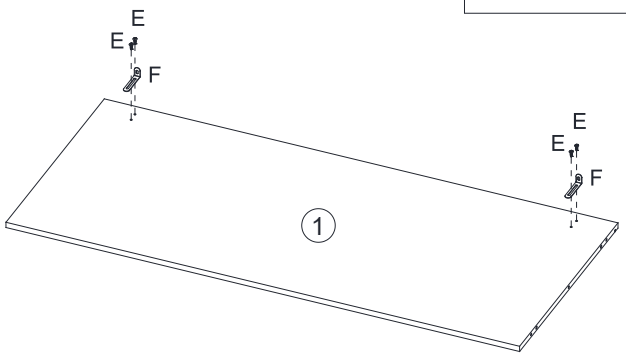

P-14-21
V-1.0

17.

A	B	C	G	S	X
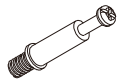		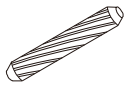		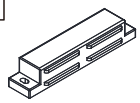	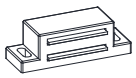
M6*35mm Bolt	15*10mm Cam Lock	8*30mm Dowel	M3*16mm Screw	Magnet	Magnet
3 pcs	6 pcs	4pcs	4pcs	1pc	1pc

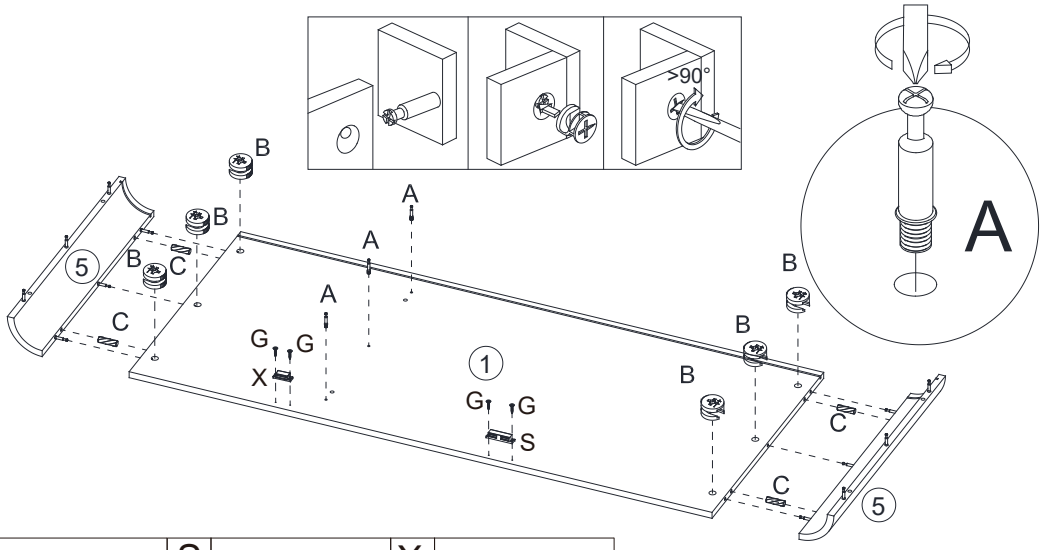

18.

B	C	G	S	X
	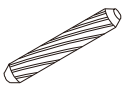		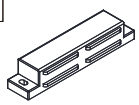	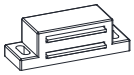
15*10mm Cam Lock	8*30mm Dowel	M3*16mm Screw	Magnet	Magnet
9 pcs	6pcs	4pcs	1pc	1pc

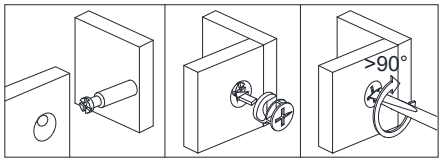

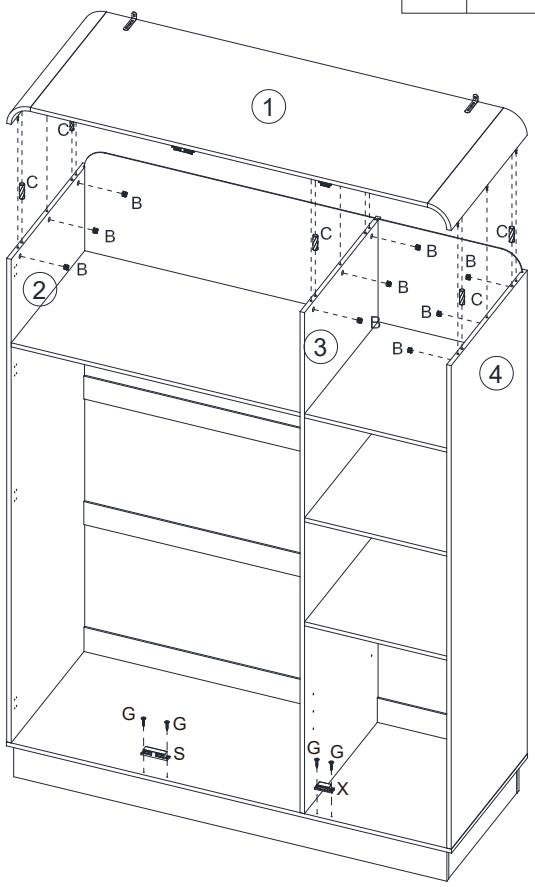

P-15-21
V-1.0

19.

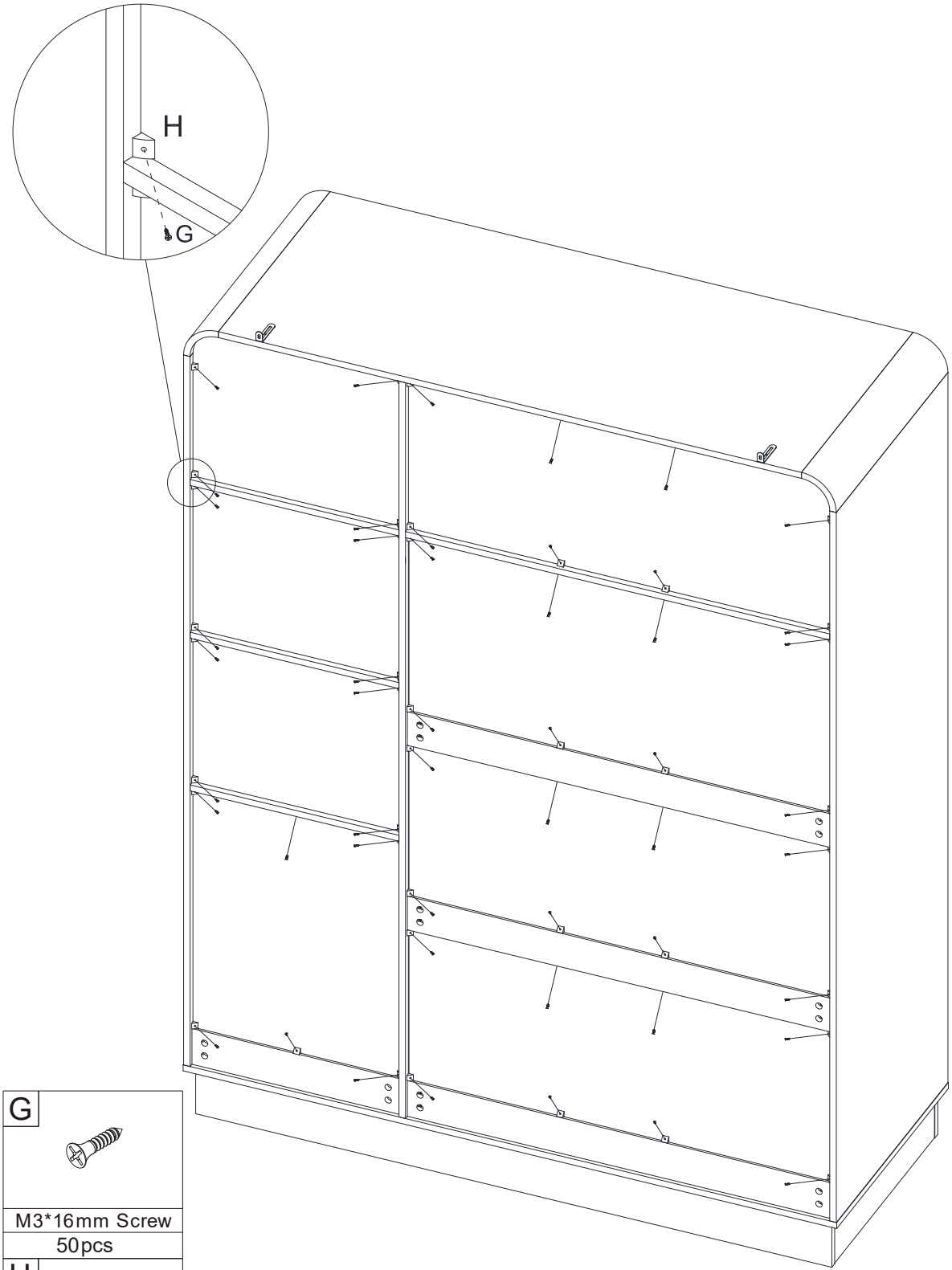

G

M3*16mm Screw

50pcs

H

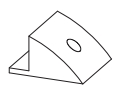

Plastic Buckle

50pcs

P-16-21
V-1.0

20.

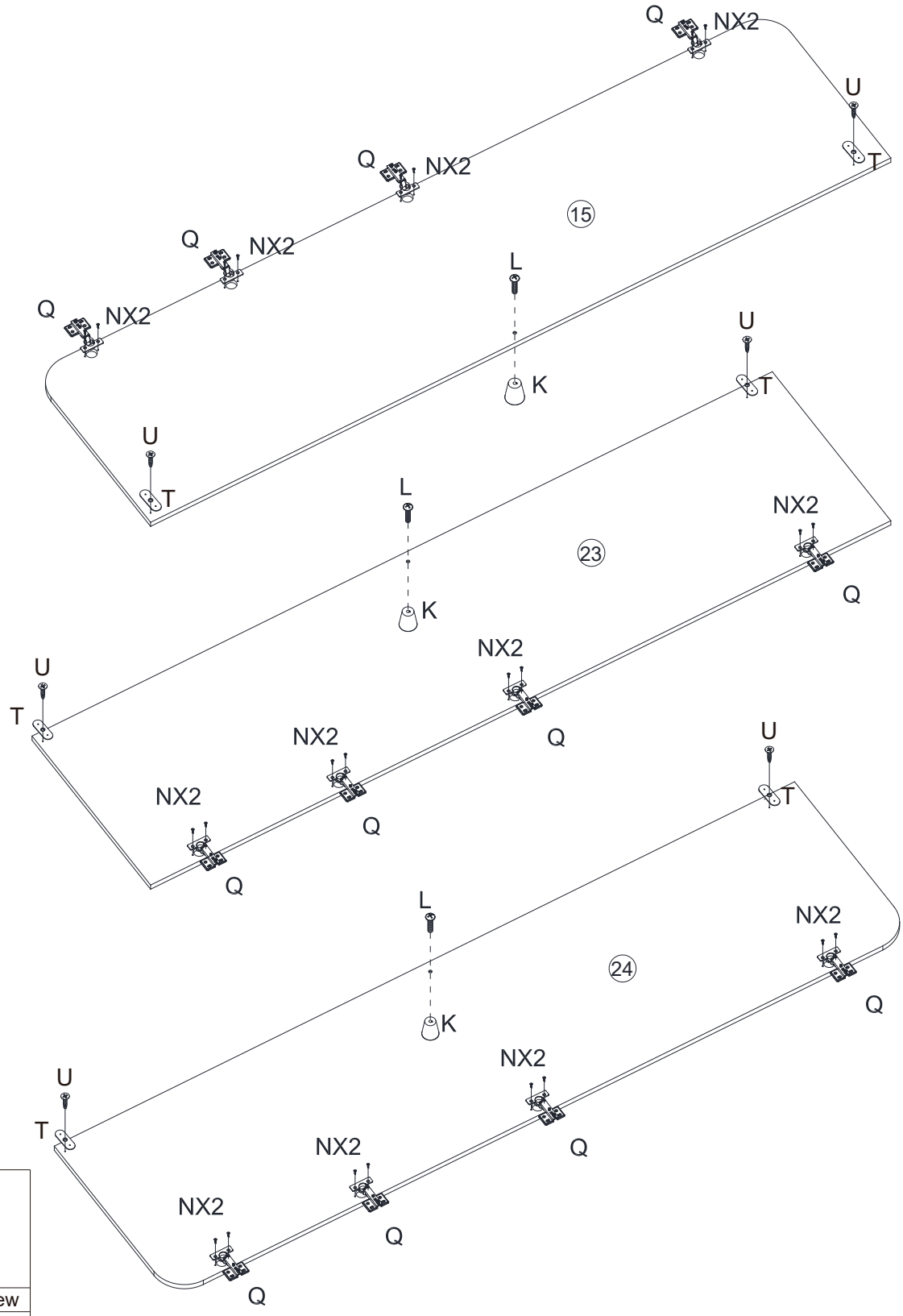

U	
	
M3*12mm Screw	
6pcs	

K	L	N	Q	T
			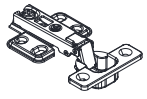	
Handle	M4*18mm Bolt	M3.5*14mm Screw	Hinge	Metal plate
3pcs	3pcs	24pcs	12pcs	6pcs

P-17-21
V-1.0

21.

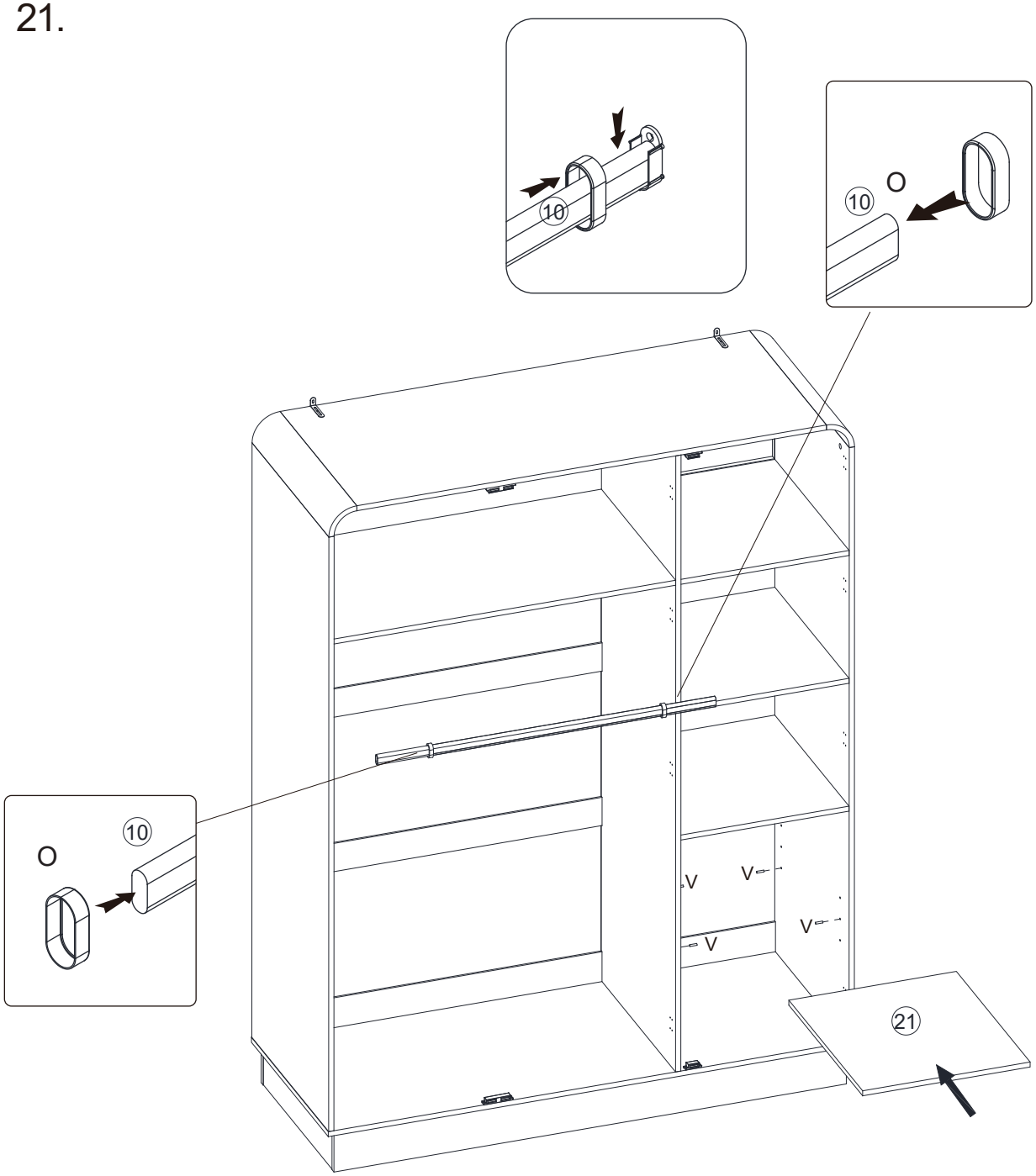

M	V
	
Clothes Tray	Shelf Pin
2pcs	4pcs

P-18-21
V-1.0

22.

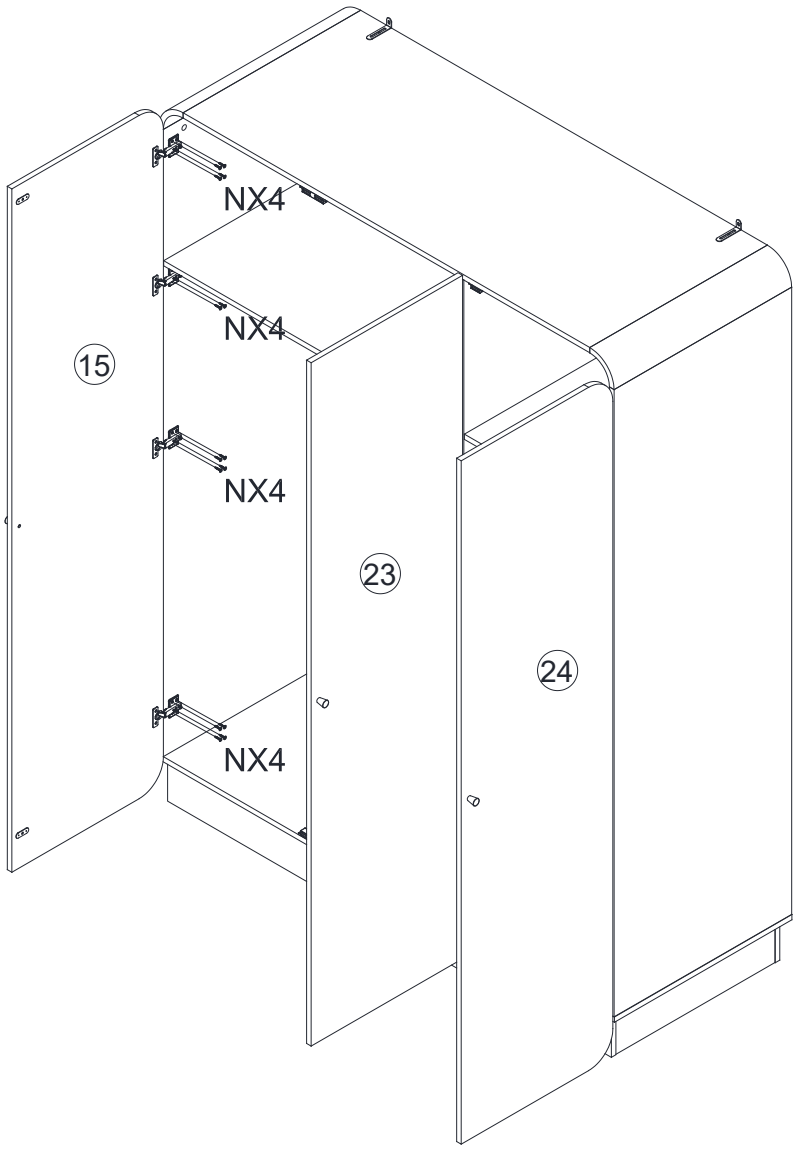

N

M3.5*14mm Screw
48pcs

P-19-21
V-1.0

23.

WARNING: Open and close the doors to make sure they are aligned and shut correctly. If necessary, adjust the screws and bolts for a good fit.

1

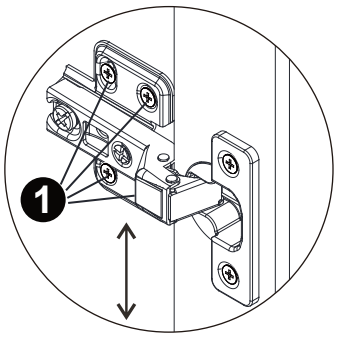

Figure 1: Adjust these 4 screws to adjust the up and down direction of the door.

2

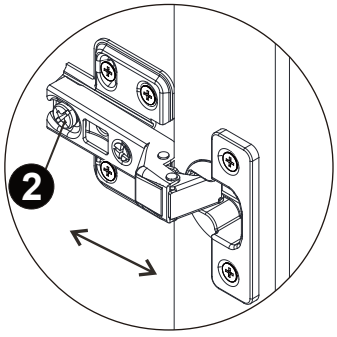

Figure 2: Adjust the bolt to adjust the front and rear direction of the door.

3

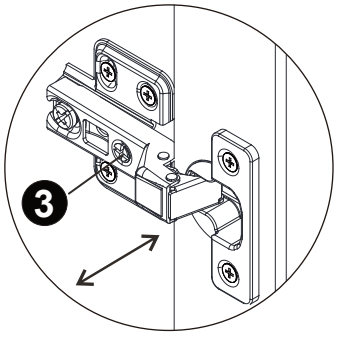

Figure 3: Adjust the bolt to adjust the left and right direction of the door.

24.

1:

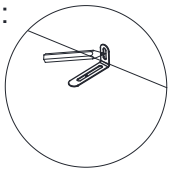

2:

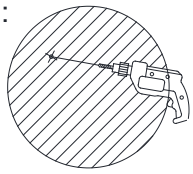

3:

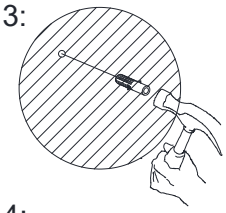

4:

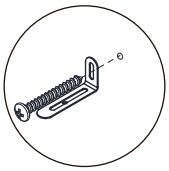

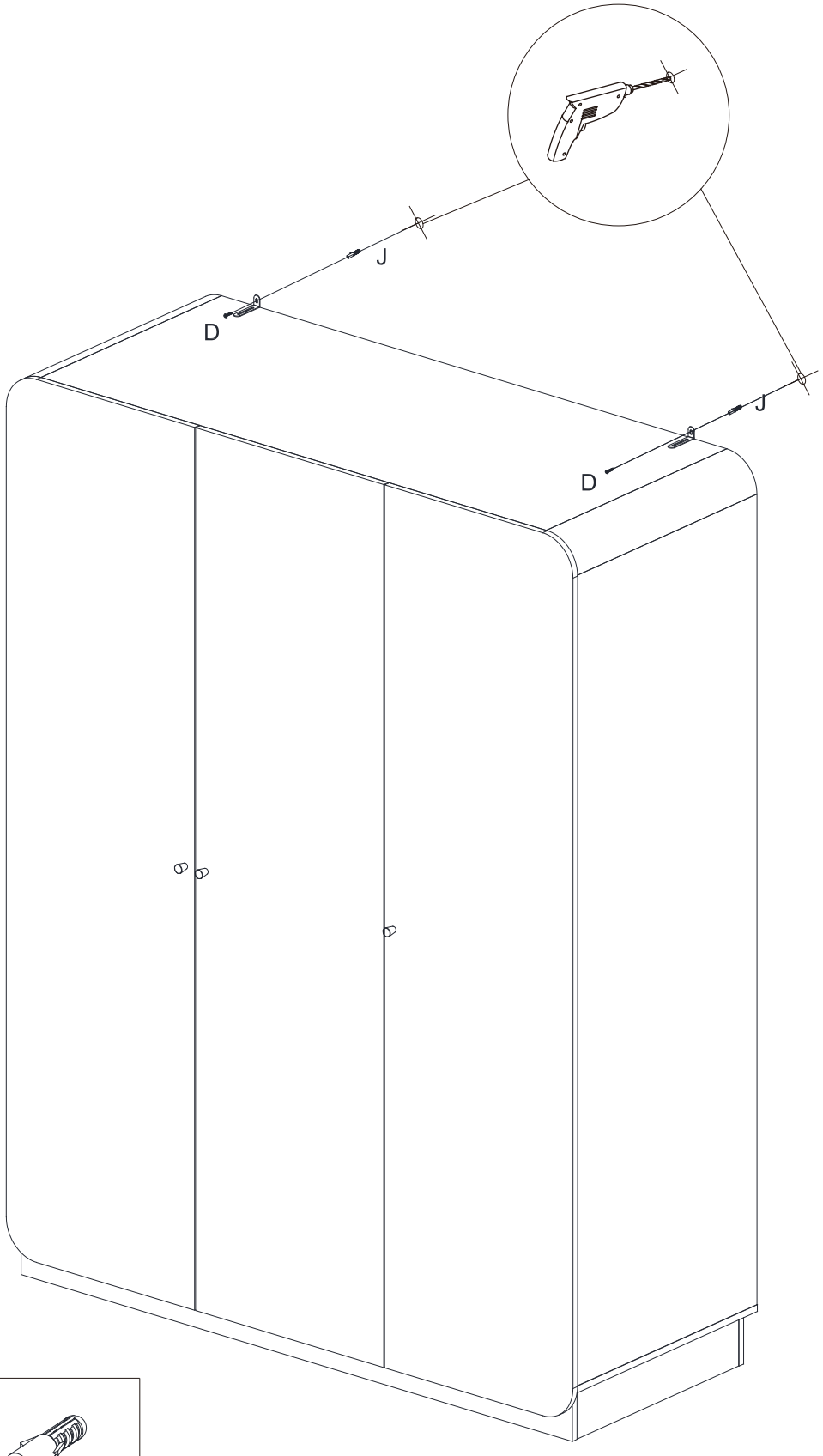

D	J
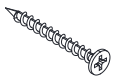	
M4*40mm Screw	Wall Plug
2pcs	2pcs

P-21-21
V-1.0