DUSK.COM

LIVING I BEDROOM I DINING

Range Name : Hattie
Box1 dimensions : W57xD47xH19cm
Product Dimension:W45xD39xH50cm

Hattie 1 Drawer Nightstand

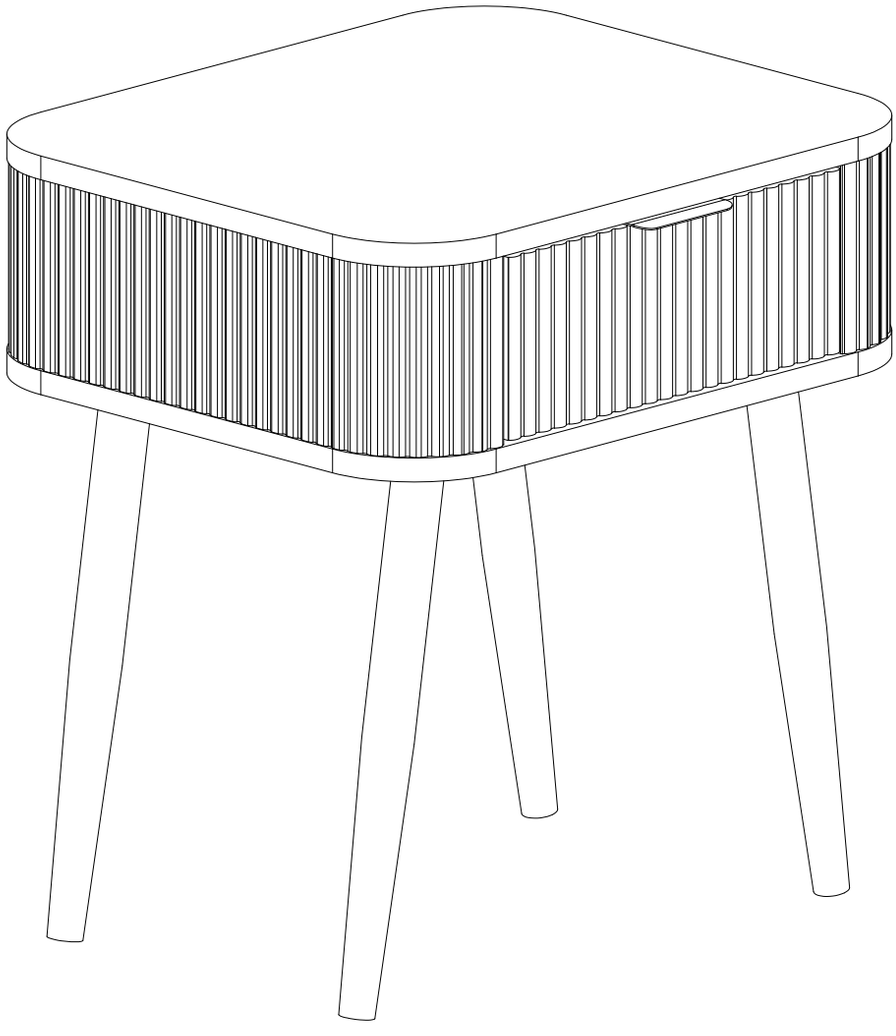

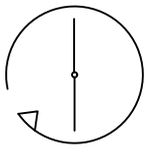

Up to 60 minutes assembly time

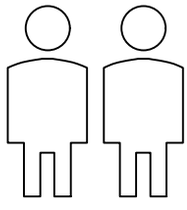

Two person assembly



Electric screwdriver prohibited

This product is intended for domestic use only,not for commercial purposes.

P-1-12
V2.0

IMPORTANT

ASSEMBLY TIP

Before you begin, it's best to identify all of the parts and fittings to build your the Hattie 1 Drawer Nightstand frame. We advise laying these out on the floor to check you have everything, and to familiarise yourself with all of the parts and fittings before building.

TOP TIP

We recommend that you assemble the Hattie 1 Drawer Nightstand in the room you'd like it to be located.This will help prevent any risk of damage to the frame whilst moving it.

SAFETY AND CARE

It's important to ensure children and animals are kept away from the assembly area, as there are small components used in this product which could present a choking hazard. All plastic and wrapping materials should also be kept away from children and animals to prevent any risk of suffocation.

HELP AND SUPPORT

Please contact our customer service team on 0113 519 0311 if you have any questions or issues with your purchase.

RECYCLING

Please ensure that packaging is disposed of in a safe and environmentally friendly way, and recycle where possible. Please keep your assembly instructions safe to refer back to in the future.

CARE AND MAINTENANCE:

1. Only clean using a damp cloth, do not use bleach or abrasive cleaners as they may damage the finish over time.

2. Do not use a very wet cloth or allow any liquid to contact with the veneer for a long period of time. Wipe any spillage immediately. Absorption can cause wood to warp or finishes to de-laminate.

3.Do not scrub or rub the surface when cleaning.

4. Do not drag Hattie 1 Drawer Nightstand when moving, lift it off the floor instead.

5. Use a placemat or a coaster when putting hot items (e.g. hot drinks and dishes) on the wood surface.

6. It is not recommended to place the item next to sources of heat such as radiators, fires or directly exposed to sunlight. This may cause the wood to crack, split or fade due to the heat and humidity.

7. Wood will mellow and change colour over time, we recommend that ornaments and items placed on the surface to be moved regularly to prevent uneven mellowing.

8. Regularly check all fixings to ensure none have come loose. Re-tighten if necessary.

9. Avoid sharp items such as a screwdriver or any pointy tools.

10. Dispose of all packaging carefully and responsibly - recycle where possible.

Parts list

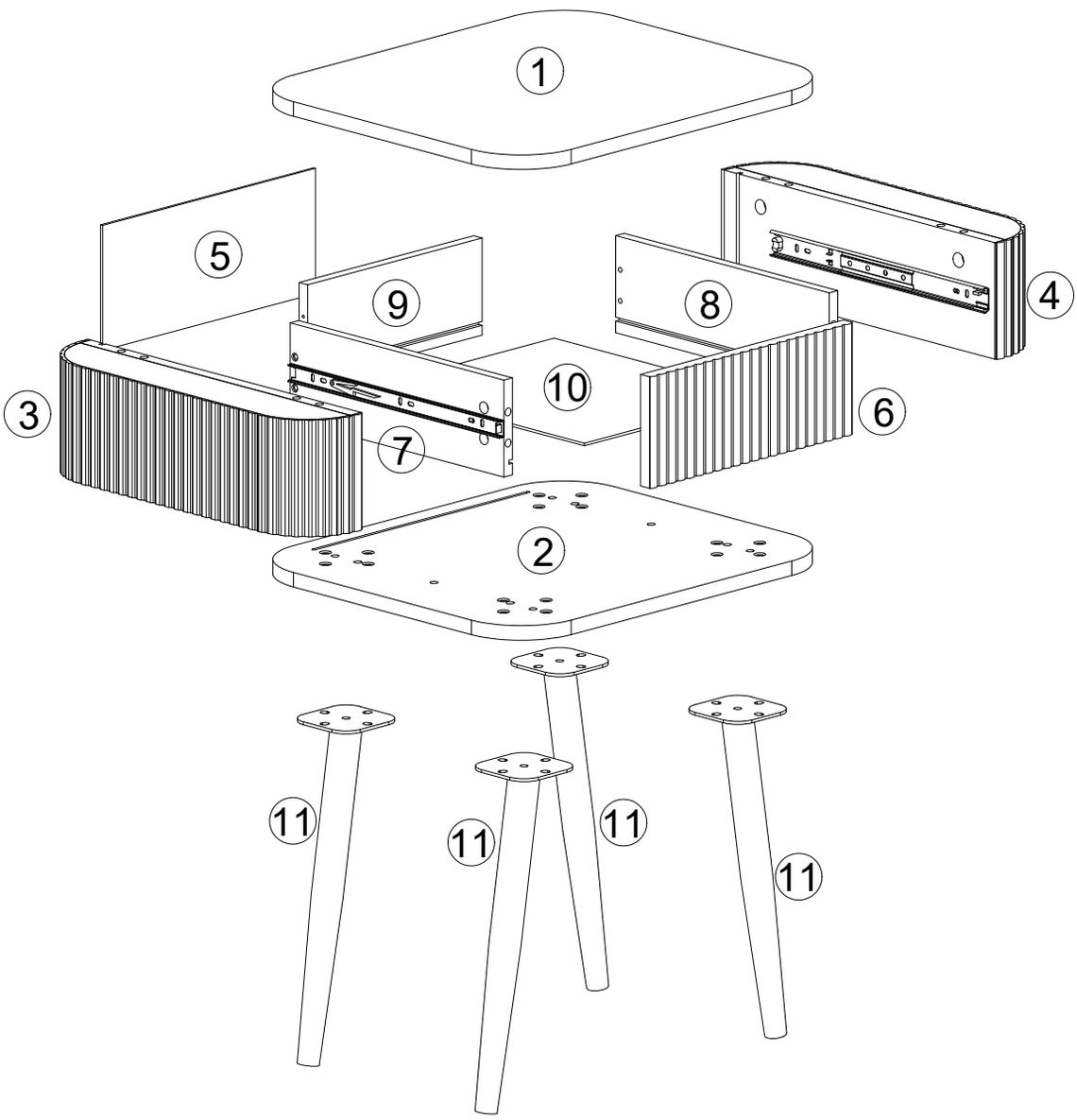

Parts list

Before you begin building your the Hattie 1 Drawer Nightstand,please take a moment to read through the instructions and make sure that you have all the relevant parts listed on the parts check list.

Part Number	Part Description	Quantity	Box No.
①	Top Panel	1pc	Box 1
②	Bottom Panel	1pc	Box 1
③	Left Side Panel with Slide pre-assembled	1pc	Box 1
④	Right Side Panel with Slide pre-assembled	1pc	Box 1
⑤	Back panel	1pc	Box 1
⑥	Drawer Front	1pc	Box 1
⑦	Drawer Left with Slide pre-assembled	1pc	Box 1
⑧	Drawer Right with Slide pre-assembled	1pc	Box 1
⑨	Drawer Back	1pc	Box 1

Part Number	Part Description	Quantity	Box No.
⑩	Drawer Bottom	1pc	Box 1
⑪	Leg	4pcs	Box 1

Fittings

Please check you have all the fittings listed below with your product in box 1.

A	B	C	D	E
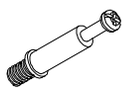		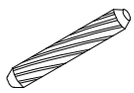		
M6.3*35mm Bolt	Ø15*9mmCam Lock	Ø8*30mm Dowel	Ø12*9mmCam Lock	M4*35mm Screw
8pcs+1pc extra	4pcs	8pcs+1pc extra	4pcs	4pcs

F	G	H	I	J
				
M3*12mm Screw	M7*38mm Screw	M6*15mm Screw	Cover	Handle
2pcs	6pcs	16pcs+2pcs extra	4pcs	1pc

K	L	M	N
	Pre-assembled Slide 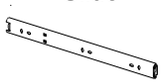	Pre-assembled Screw 	Pre-assembled Screw 
4mm Allen Key	Slide	M3.5*12mm Screw	M3.5*14mm Screw
1pc	2pcs	4pcs	4pcs

Pre-assembled Fittings

L-1	L-2	M	N
			
Slide	Slide	M3.5*12mm Screw	M3.5*14mm Screw
2pcs	2pcs	4pcs	4pcs

1. Attach parts to the boards.

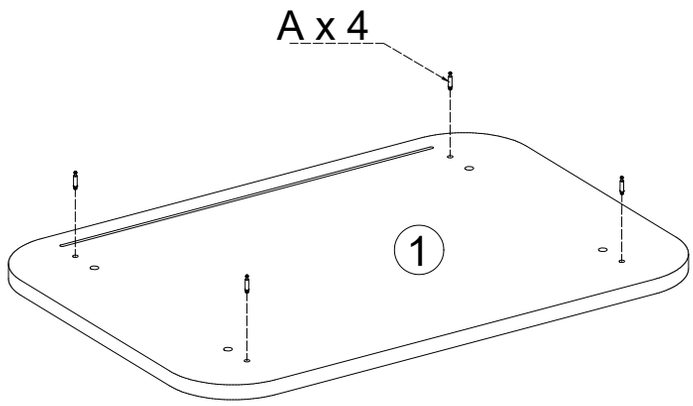

A
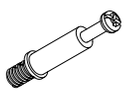
M6.3*35mm Bolt
4pcs

2. Attach parts to the boards.

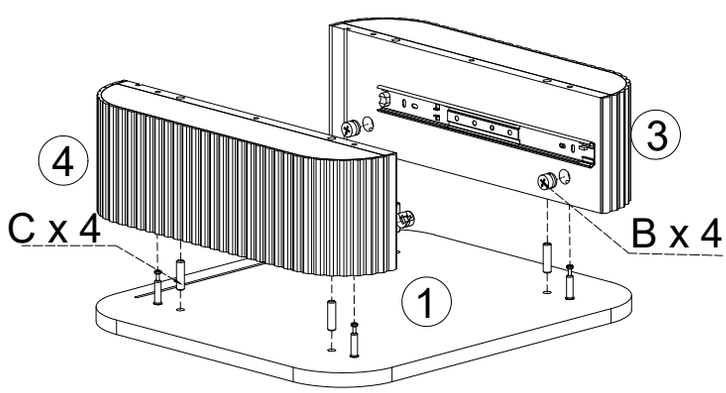

B	C
	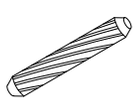
Ø15*9mmCam Lock	Ø8*30mm Dowel
4pcs	4pcs

3. Attach back to the frame.

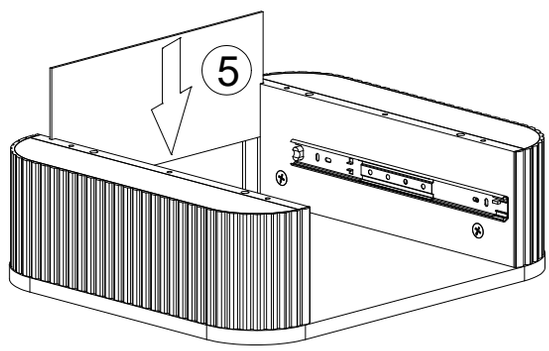

4. Attach parts to the boards.

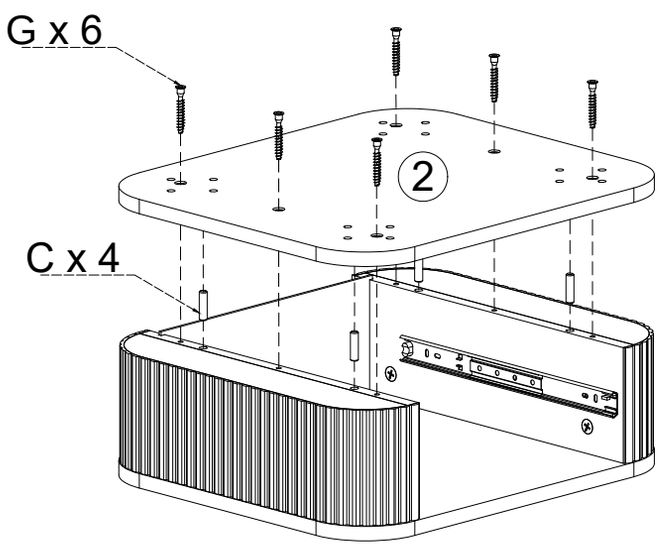

C	G	K
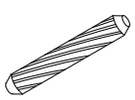		
Ø8*30mm Dowel	M7*38mm Screw	4mm Allen Key
4pcs	6pcs	1pc

5. Assemble the leg to the frame.

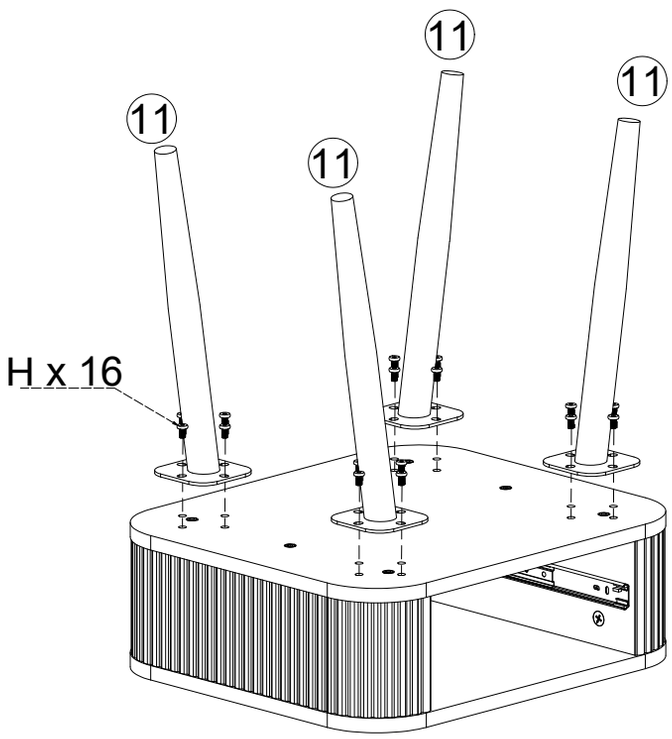

H

M6*15mm Screw
16pcs

6. Assemble the drawer.

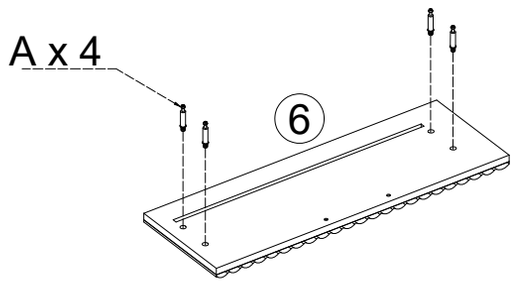

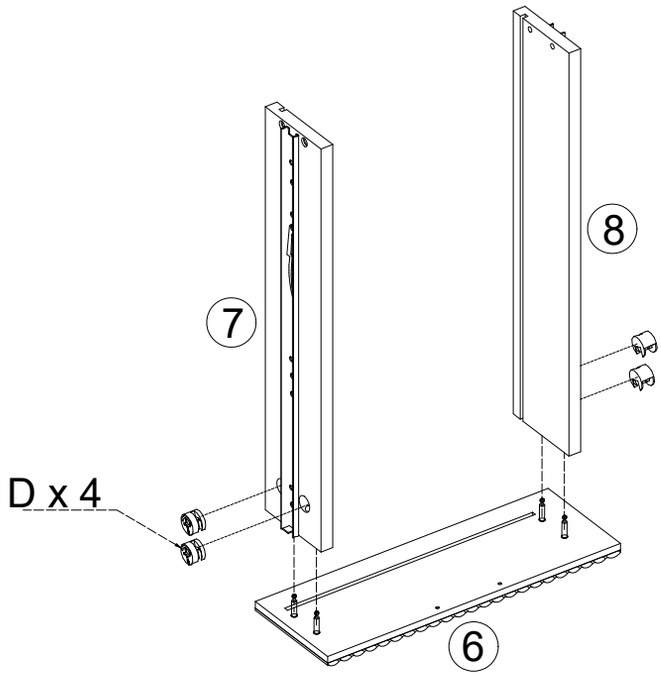

A	D
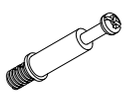	
M6.3*35mm Bolt	Ø12*9mmCam Lock
4pcs	4pcs

7. Assemble the drawer.

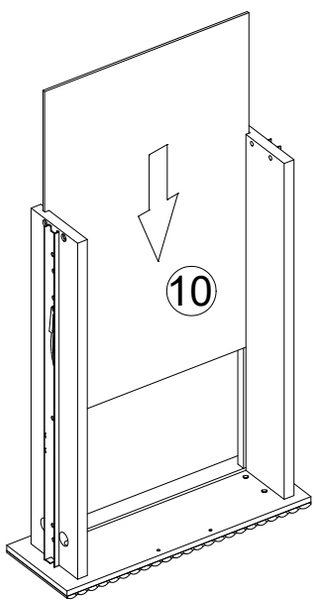

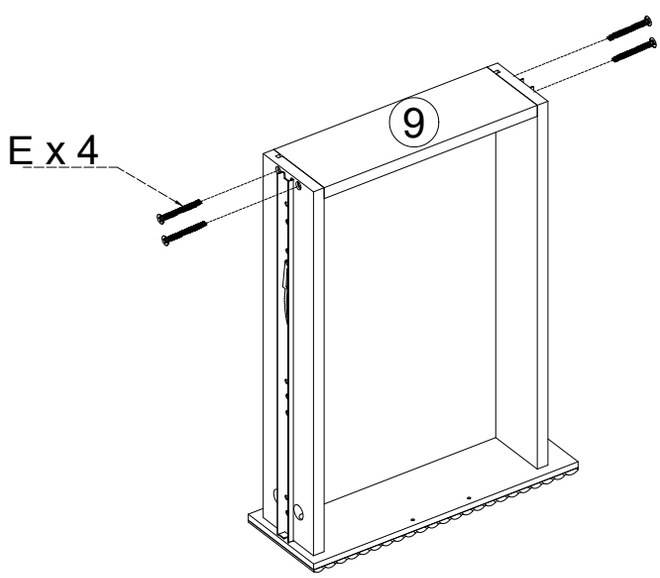

E

M4*35mm Screw
4pcs

8. Attach parts to the boards.

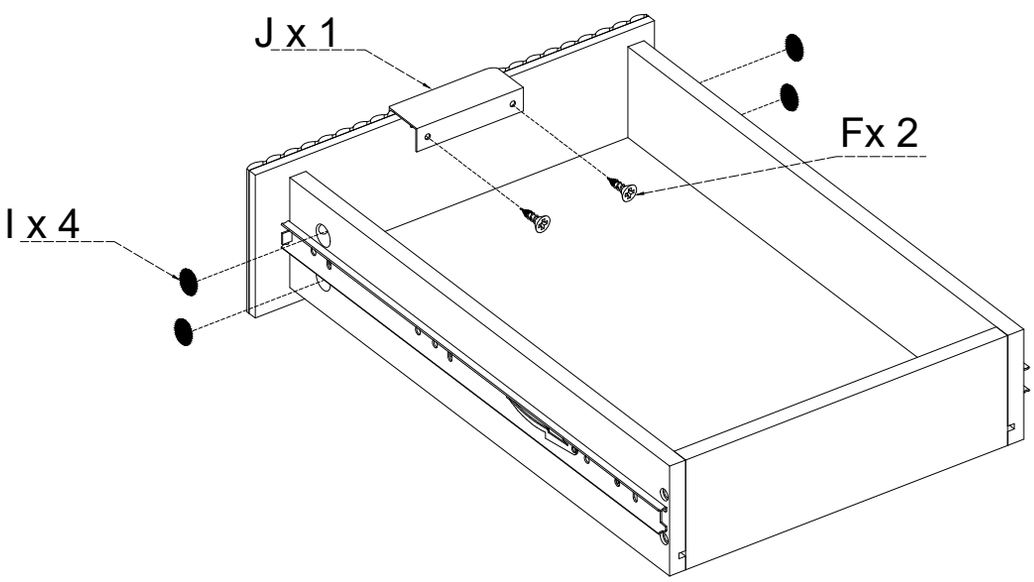

F	I	J
M3*12mm Screw	Cover	Handle
2pcs	4pcs	1pc

9.Assemble drawer to the Hattie 1 Drawer Nightstand.

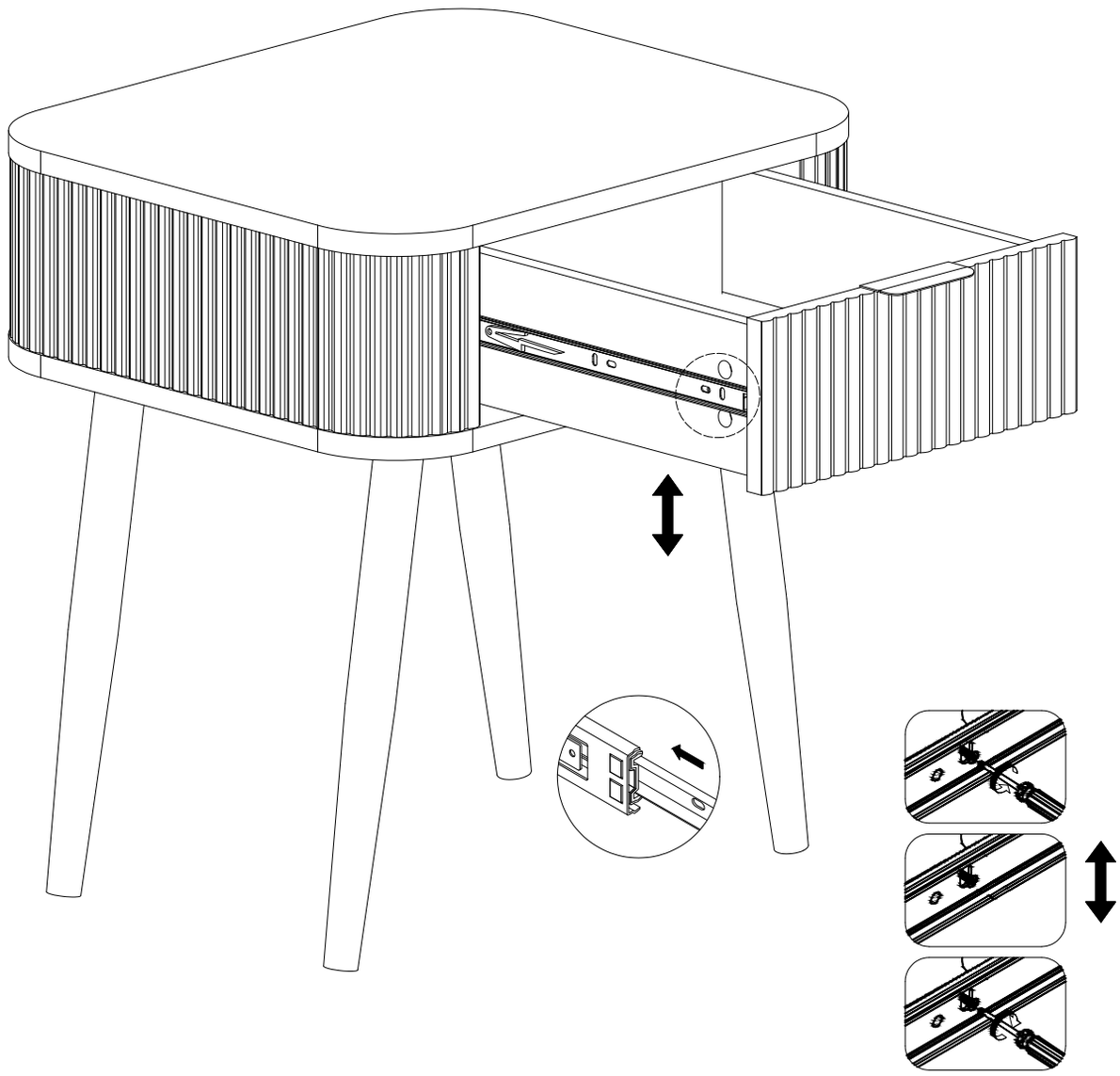

When installing the drawer into the cabinet, align the slide rails properly first, then push it gently-do not force it in.

Make sure to move the metal sheet to the outermost position.

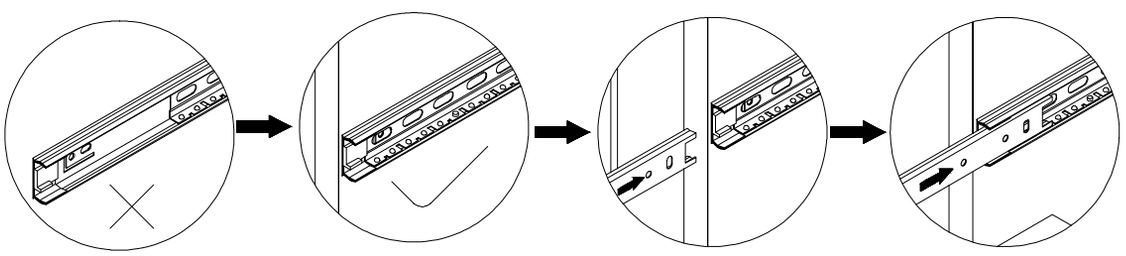

10. How to take apart a drawer:

1. Pull out the drawer until the plastic clips on the rail are visible.
2. Push the plastic clip up on the left side and down on the right side. Note that the clips on the left and right rails face opposite directions at the same time.
3. While pressing the both clips at the same time, pull out the drawer to separate the rails.

